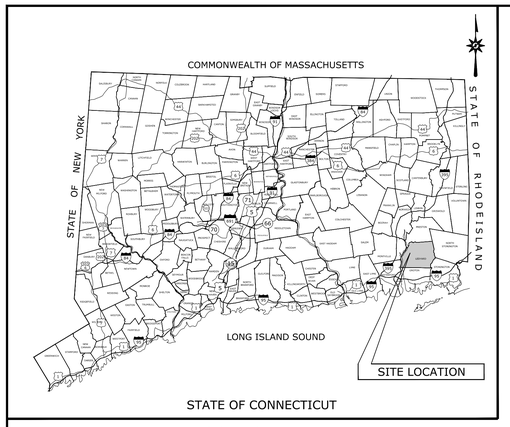

LOCATION MAP

N.T.S.

LAND DEVELOPMENT PLANS FOR PROPOSED MULTI-FAMILY RESIDENTIAL DEVELOPMENT ISSUED FOR PERMITTING

1947 CENTER GROTON ROAD
LEDYARD, CT 06339

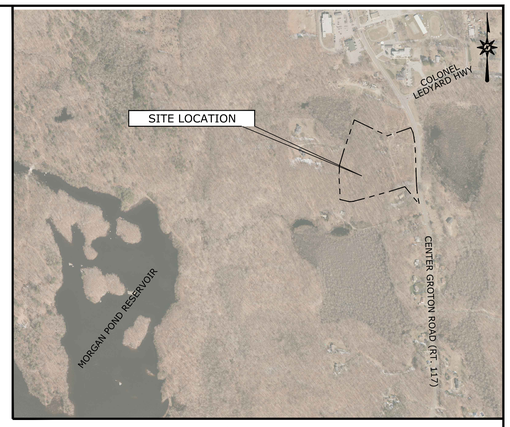

VICINITY MAP

SCALE: 1"=600'

PREPARED FOR:

EG HOME, LLC
3 POMPERAUG OFFICE PARK, SUITE 105
SOUTHBURY, CT 06488

PREPARED BY:

BL Companies
ARCHITECTURE
ENGINEERING
ENVIRONMENTAL
LAND SURVEYING

355 Research Parkway
Meriden, CT 06450
(203) 630-1406

FOR PERMITTING PURPOSES ONLY
NOT RELEASED FOR CONSTRUCTION

Sheet List Table

Sheet Number	Sheet Title
G0.00	COVER SHEET
G0.01	GENERAL NOTES
EX-1	PROPERTY TOPOGRAPHIC SURVEY
C0.00	DEMOLITION PLAN
C1.00	SITE PLAN
C1.100	SITE DETAILS
C1.101	SITE DETAILS
C2.00	GRADING PLAN
C2.50	DRAINAGE PLAN
C2.100	GRADING AND DRAINAGE DETAILS
C2.101	GRADING AND DRAINAGE DETAILS
C2.102	GRADING AND DRAINAGE DETAILS
C3.00	SITE UTILITIES PLAN
C3.100	SITE UTILITIES DETAILS
C4.00	EROSION & SEDIMENT CONTROL PLAN
C4.100	EROSION & SEDIMENT CONTROL NOTES
C4.101	EROSION & SEDIMENT CONTROL DETAILS
C5.00	LANDSCAPING PLAN
C5.01	LANDSCAPE PLAN ENLARGEMENT
C5.02	LANDSCAPE PLAN ENLARGEMENT
C5.100	LANDSCAPING NOTES AND DETAILS
C6.00	LIGHTING PLAN
C6.100	LIGHTING NOTES AND DETAILS

SUBCONSULTANTS:

DEVELOPER:

EG HOME, LLC
3 POMPERAUG OFFICE PARK, SUITE 105
SOUTHBURY, CT 06488

OWNER:

1947 CENTER GROTON ROAD LLC
247 BROAD STREET
MILFORD, CT 06460

DATES

ISSUE DATE: 04/01/2026
REVISION:

CAD FILE: G2502197-00

BL PROJECT NUMBER: 2502197

© 2026 BL COMPANIES, INC. THESE DRAWINGS SHALL NOT BE UTILIZED BY ANY PERSON, FIRM OR CORPORATION WITHOUT THE SPECIFIC WRITTEN PERMISSION OF BL COMPANIES.

SITE WORK GENERAL NOTES

1. THESE PLANS ARE FOR PERMITTING PURPOSES ONLY AND ARE NOT FOR CONSTRUCTION.

2. ALL CONSTRUCTION SHALL COMPLY WITH THE PROJECT SPECIFICATION MANUAL; CORPORATION STANDARDS, MUNICIPAL STANDARDS AND SPECIFICATIONS, CONNECTICUT DEPARTMENT OF TRANSPORTATION STANDARDS AND SPECIFICATIONS, 2010 ADA STANDARDS, AND STATE BUILDING CODE IN THE ABOVE REFERENCED INCREASING HIERARCHY. ALL CONSTRUCTION SHALL BE PERFORMED IN ACCORDANCE WITH ALL APPLICABLE OSHA, FEDERAL, STATE AND LOCAL REGULATIONS.

3. REFER TO OTHER PLANS BY OTHER DISCIPLINES, DETAILS AND PROJECT MANUAL FOR ADDITIONAL INFORMATION. THE CONTRACTOR SHALL VERIFY ALL SITE AND BUILDING CONDITIONS IN THE FIELD AND CONTACT THE CIVIL ENGINEER AND ARCHITECT IF THERE ARE ANY QUESTIONS OR CONFLICTS REGARDING THE CONSTRUCTION DOCUMENTS AND/OR FIELD CONDITIONS, SO THAT APPROPRIATE REVISIONS CAN BE MADE PRIOR TO BIDDING. ANY CONFLICT BETWEEN THE DRAWINGS AND SPECIFICATIONS SHALL BE CONFIRMED WITH THE OWNER'S CONSTRUCTION MANAGER PRIOR TO BIDDING.

4. DO NOT INTERRUPT EXISTING UTILITIES SERVICING FACILITIES OCCUPIED AND USED BY THE OWNER OR OTHERS DURING OCCUPIED HOURS EXCEPT WHEN SUCH INTERRUPTIONS HAVE BEEN AUTHORIZED IN WRITING BY THE OWNER AND THE LOCAL MUNICIPALITIES. INTERRUPTIONS SHALL ONLY OCCUR AFTER ACCEPTABLE TEMPORARY SERVICE HAS BEEN PROVIDED.

5. THE CONTRACTOR SHALL ABIDE BY ALL OSHA, FEDERAL, STATE, AND LOCAL REGULATIONS WHEN OPERATING CRANES, BOOMS, HOISTS, ETC. IN CLOSE PROXIMITY TO OVERHEAD ELECTRIC LINES. IF CONTRACTOR MUST OPERATE EQUIPMENT CLOSE TO ELECTRIC LINES, CONTACT POWER COMPANY TO MAKE ARRANGEMENTS FOR PROPER SAFEGUARDS. ANY UTILITY COMPANY FEES SHALL BE PAID FOR BY THE CONTRACTOR.

6. THE CONTRACTOR SHALL PROVIDE AS-BUILT RECORD DRAWINGS OF ALL CONSTRUCTION (INCLUDING UNDERGROUND UTILITIES AND STORMWATER SYSTEM) TO THE OWNER AT THE END OF CONSTRUCTION.

7. THE ARCHITECT OR ENGINEER IS NOT RESPONSIBLE FOR SITE SAFETY MEASURES TO BE EMPLOYED DURING CONSTRUCTION. THE ARCHITECT AND ENGINEER HAVE NO CONTRACTUAL DUTY TO CONTROL THE SAFEST METHODS OR MEANS OF THE WORK, JOB SITE RESPONSIBILITIES, SUPERVISION OR TO SUPERVISE SAFETY AND DOES NOT VOLUNTARILY ASSUME ANY SUCH DUTY OR RESPONSIBILITY.

8. THE CONTRACTOR SHALL COMPLY WITH CFR 29 PART 1926 FOR EXCAVATION, TRENCHING, AND TRENCH PROTECTION REQUIREMENTS.

9. INFORMATION ON EXISTING UTILITIES AND STORM DRAINAGE SYSTEMS HAS BEEN COMPILED FROM AVAILABLE INFORMATION INCLUDING UTILITY COMPANY AND MUNICIPAL OR COUNTY OR STATE RECORD MAPS AND/OR FIELD SURVEY AND IS NOT GUARANTEED CORRECT OR COMPLETE. UTILITIES AND STORM DRAINAGE SYSTEMS ARE SHOWN TO ALERT THE CONTRACTOR TO THEIR PRESENCE AND THE CONTRACTOR IS SOLELY RESPONSIBLE FOR DETERMINING ACTUAL LOCATIONS AND ELEVATIONS OF ALL UNDERGROUND AND OVERHEAD UTILITIES AND STORM DRAINAGE SYSTEMS INCLUDING SERVICES. THE CONTRACTOR SHALL VERIFY THE SIZE, LOCATION AND INVERT UPON COMMENCEMENT OF CONSTRUCTION AND/OR THE ORDERING OF RELEVANT MATERIALS. THE CONTRACTOR IS RESPONSIBLE FOR THE RESTORATION OF ANY AND ALL UTILITIES ENCOUNTERED AND DISCONNECTED AS A RESULT OF THE CONSTRUCTION ACTIVITIES.

10. PRIOR TO DEMOLITION OR CONSTRUCTION, THE CONTRACTOR SHALL CONTACT CT CALL BEFORE YOU DIG (CBYD) 72 HOURS BEFORE COMMENCEMENT OF WORK AT CT (800) 922-4455 OR AT 811 AND VERIFY ALL UTILITY AND STORM DRAINAGE SYSTEM LOCATIONS. THE CONTRACTOR SHALL EMPLOY THE USE OF A UTILITY LOCATING COMPANY TO PROVIDE SUBSURFACE UTILITY ENGINEERING CONSISTING OF DESIGNATING UTILITIES AND STORM PIPING ON PRIVATE PROPERTY WITHIN THE CONTRACT LIMIT AND CONSISTING OF DESIGNATING AND LOCATING WHERE PROPOSED UTILITIES AND STORM PIPING CROSS EXISTING UTILITIES AND STORM PIPING WITHIN THE CONTRACT LIMITS. STREET LIGHTING AND TRAFFIC SIGNALS LOCATED WITHIN THE PUBLIC RIGHT-OF WAY MAY NOT BE MARKED OUT, AND A SEPARATE CONTACT MUST BE MADE. THE CONTRACTOR SHALL BE RESPONSIBLE FOR ANY/ALL WORK TO RELOCATE ANY/ALL STREET LIGHTING EQUIPMENT TO MAINTAIN SYSTEM.

11. DO NOT SCALE DRAWINGS. DIMENSIONS GOVERN OVER SCALED DIMENSIONS.

12. SHOULD CONFLICTING INFORMATION BE FOUND WITHIN THE CONTRACT DOCUMENTS, IT IS INCUMBENT UPON THE CONTRACTOR TO REQUEST CLARIFICATION PRIOR TO PROCEEDING WITH THE WORK. FOR BUDGETING PURPOSES, THE CONTRACTOR SHALL CARRY THE COST OF THE HIGHER QUALITY/QUANTITY OF WORK UNTIL SUCH TIME THAT A CLARIFICATION IS RENDERED.

13. ALL CONTRACTORS AND SUBCONTRACTORS SHALL OBTAIN COMPLETE DRAWING PLAN SETS FOR BIDDING AND CONSTRUCTION. PLAN SETS OR PLAN SET ELECTRONIC POSTINGS SHALL NOT BE DISASSEMBLED INTO PARTIAL PLAN SETS FOR USE BY CONTRACTORS AND SUBCONTRACTORS OF INDIVIDUAL TRADES. IT SHALL BE THE CONTRACTOR'S AND SUBCONTRACTOR'S RESPONSIBILITY TO OBTAIN COMPLETE PLAN SETS OR COMPLETE PLAN SET ELECTRONIC POSTINGS FOR USE IN BIDDING AND CONSTRUCTION.

14. ALL NOTES AND DIMENSION DESIGNATED AS "TYPICAL" OR "TYP" APPLY TO ALL LIKE OR SIMILAR CONDITIONS THROUGHOUT THE PROJECT.

15. CONTRACTOR(S) TO TAKE AND VERIFY ALL DIMENSIONS AND CONDITIONS OF THE WORK AND BE RESPONSIBLE FOR COORDINATION OF SAME. FIELD VERIFY ALL EXISTING CONDITIONS PRIOR TO START OF WORK.

16. BL COMPANIES WILL PREPARE FINAL CONSTRUCTION DOCUMENTS SUITABLE FOR BIDDING AND CONSTRUCTION. PROGRESS SETS OF THESE DOCUMENTS ARE NOT SUITABLE FOR THOSE PURPOSES. IF CLIENT ELECTS TO SOLICIT BIDS OR ENTER INTO CONSTRUCTION CONTRACTS UTILIZING CONSTRUCTION DOCUMENTS THAT ARE NOT YET FINAL, CONSULTANT SHALL NOT BE RESPONSIBLE FOR ANY COSTS OR DELAY ARISING AS A RESULT.

17. THE CONTRACTOR SHALL NOT PROCEED WITH ANY MODIFICATIONS TO THE DESIGN PLANS UNTIL THE WORK HAS BEEN APPROVED. ANY WORK DONE WITHOUT THE APPROVAL OF THE ENGINEER AND/OR CLIENT MAY BE DEEMED UNACCEPTABLE.

18. NO CONSTRUCTION OR DEMOLITION SHALL BEGIN UNTIL APPROVAL OF THE FINAL PLANS IS GRANTED BY ALL GOVERNING AND REGULATORY AGENCIES.

19. THE OWNER IS RESPONSIBLE FOR OBTAINING ALL NECESSARY ZONING PERMITS REQUIRED BY GOVERNMENT AGENCIES PRIOR TO CONSTRUCTION. THE CONTRACTOR SHALL CONTACT AND OBTAIN FROM MUNICIPAL SOURCES ALL CONSTRUCTION PERMITS, INCLUDING ANY STATE DOT PERMITS, SEWER AND WATER CONNECTION PERMITS, AND ROADWAY CONSTRUCTION PERMITS. THE CONTRACTOR SHALL POST ALL BONDS, PAY ALL FEES, PROVIDE PROOF OF INSURANCE AND PROVIDE TRAFFIC CONTROL NECESSARY FOR THIS WORK EXCEPT CTDOT ENCROACHMENT PERMIT BOND.

20. THE CONTRACTOR SHALL SUBMIT SHOP DRAWINGS OF ALL PRODUCTS AND MATERIALS PER PLANS AND SPECIFICATIONS TO THE OWNER AND CIVIL ENGINEER FOR REVIEW AND APPROVAL PRIOR TO FABRICATION OR DELIVERY TO THE SITE. ALLOW A MINIMUM OF 14 WORKING DAYS FOR REVIEW.

21. THE CONTRACTOR SHALL FOLLOW THE SEQUENCE OF CONSTRUCTION NOTES PROVIDED ON THE EROSION AND SEDIMENT CONTROL PLAN.

22. THE CONTRACTOR SHALL REFERENCE ARCHITECTURAL PLANS FOR EXACT DIMENSIONS AND CONSTRUCTION DETAILS OF BUILDING, RAISED CONCRETE SIDEWALKS, LANDINGS, RAMPS, AND STAIRS.

23. SHOULD ANY UNCHARTED OR INCORRECTLY CHARTED, EXISTING PIPING OR OTHER UTILITY BE UNCOVERED DURING EXCAVATION, CONSULT THE CIVIL ENGINEER IMMEDIATELY FOR DIRECTIONS BEFORE PROCEEDING FURTHER WITH WORK IN THIS AREA.

24. ALL SITE DIMENSIONS ARE REFERENCED TO THE FACE OF CURBS OR EDGE OF PAVING AS APPLICABLE UNLESS OTHERWISE NOTED. ALL BUILDING DIMENSIONS ARE REFERENCED TO THE OUTSIDE FACE OF THE STRUCTURE.

25. THE CONTRACTOR SHALL PROVIDE AND MAINTAIN TRAFFIC DEVICES FOR PROTECTION OF VEHICLES AND PEDESTRIANS CONSISTING OF DRUMS, BARRIERS, SIGNS, LIGHTS, FENCES, TEMPORARY WALKWAYS, TRAFFIC CONTROLLERS AND UNIFORMED TRAFFIC OFFICERS AS REQUIRED OR AS ORDERED BY THE ENGINEER OR AS REQUIRED BY THE LOCAL GOVERNING AUTHORITIES OR AS REQUIRED BY PERMIT STIPULATIONS OR AS REQUIRED BY THE OWNER. CONTRACTOR SHALL MAINTAIN ALL TRAFFIC LANES AND PEDESTRIAN WALKWAYS FOR USE AT ALL TIMES UNLESS WRITTEN APPROVAL FROM THE APPROPRIATE GOVERNING AGENCY IS GRANTED.

26. TRAFFIC CONTROL SIGNAGE SHALL CONFORM TO THE STATE DOT STANDARD DETAIL SHEETS AND THE MANUAL OF UNIFORM TRAFFIC CONTROL DEVICES. SIGNS SHALL BE INSTALLED PLUMB WITH THE EDGE OF THE SIGN 2' OFF THE FACE OF THE CURB, AND WITH 7' VERTICAL CLEARANCE UNLESS OTHERWISE DETAILED OR NOTED.

27. REFER TO DETAIL SHEETS FOR PAVEMENT, CURBING, AND SIDEWALK INFORMATION.

28. THE CONTRACT LIMIT IS THE PROPERTY LINE UNLESS OTHERWISE SPECIFIED OR SHOWN ON THE CONTRACT DRAWINGS.

29. THE CONTRACTOR SHALL SUBMIT A SHOP DRAWING OF THE PAVEMENT MARKING PAINT MIXTURE PRIOR TO STRIPING.

30. PAVEMENT MARKING KEY:

4" SYDL 4" SOLID YELLOW DOUBLE LINE
4" SYL 4" SOLID YELLOW LINE
4" SWL 4" SOLID WHITE LINE
12" SWSB 12" SOLID WHITE STOP BAR
4" BWL 4" BROKEN WHITE LINE 10' STRIPE 30' SPACE

31. PARKING SPACES SHALL BE STRIPED WITH 4" SWL; HATCHED AREA SHALL BE STRIPED WITH 4" SWL AT A 45° ANGLE, 2' ON CENTER. HATCHING, SYMBOLS, AND STRIPING FOR ADA ACCESSIBLE SPACES SHALL BE PAINTED YELLOW. OTHER MARKINGS SHALL BE PAINTED WHITE OR AS NOTED.

32. ALL NON-THERMOPLASTIC PAVEMENT MARKINGS SHALL HAVE TWO COATS APPLIED. PAVEMENT MARKINGS SHALL BE REFLECTIVE IN ACCORDANCE WITH STATE DOT SPECIFICATIONS.

33. PAVEMENT MARKINGS SHALL BE HOT APPLIED TYPE IN ACCORDANCE WITH STATE DOT SPECIFICATIONS, UNLESS WHERE EPOXY RESIN PAVEMENT MARKINGS ARE INDICATED.

34. THE CONTRACTOR SHALL RESTORE ANY UTILITY STRUCTURE, DRAINAGE STRUCTURE, PIPE, UTILITY, PAVEMENT, CURBS, SIDEWALKS, LANDSCAPED AREAS, SWALE, PAVEMENT MARKINGS, OR SIGNAGE DISTURBED DURING DEMOLITION AND/OR CONSTRUCTION TO THEIR ORIGINAL CONDITION OR BETTER, AS APPROVED BY THE CIVIL ENGINEER, AND TO THE SATISFACTION OF THE OWNER AND TOWN OF LEDYARD.

35. EXISTING BOUNDARY AND TOPOGRAPHY IS BASED ON DRAWING TITLED "PROPERTY/TOPOGRAPHIC SURVEY"; SCALE 1"=40', DATED 01/13/2026, BY BL COMPANIES INC.

36. ALTERNATIVE METHODS AND PRODUCTS OTHER THAN THOSE SPECIFIED MAY BE USED IF REVIEWED AND APPROVED BY THE OWNER, CIVIL ENGINEER, AND APPROPRIATE REGULATORY AGENCY PRIOR TO INSTALLATION DURING THE BIDDING PROCESS.

37. CTDOT ENCROACHMENT PERMIT SHALL BE OBTAINED BY CONTRACTOR WHO SHALL PAY ALL FEES, PROVIDE PROOF OF INSURANCE AND PROVIDE TRAFFIC PROTECTION NECESSARY FOR THE WORK. THE OWNER SHALL POST CTDOT ENCROACHMENT PERMIT BOND.

38. AN EROSION CONTROL BOND IS REQUIRED TO BE POSTED BY THE CONTRACTOR BEFORE THE START OF ANY ACTIVITY ON OR OFF SITE. THE AMOUNT OF THE EROSION CONTROL BOND WILL BE DETERMINED BY THE AUTHORITY HAVING JURISDICTION.

39. THE PROJECT PARCEL IS LOCATED WITHIN FEMA FLOOD HAZARD AREA "X" (AREAS DETERMINED TO BE OUTSIDE THE 0.2% ANNUAL CHANCE FLOODPLAIN).

40. THERE ARE WETLANDS LOCATED ON THE SITE AS INDICATED BY BL COMPANIES MAPPING.

41. 12" SWSB (STOP BAR) AND 4" SYDL AND SWL PAVEMENT MARKINGS LOCATED IN DRIVEWAYS AND IN STATE HIGHWAY SHALL BE EPOXY RESIN TYPE ACCORDING TO DOT SPECIFICATIONS.

42. FIRE LANES SHALL BE ESTABLISHED AND PROPERLY DESIGNATED IN ACCORDANCE WITH THE REQUIREMENTS OF THE FIRE DISTRICT FIRE MARSHAL.

43. THE CONTRACTOR SHALL REMOVE CONFLICTING PAVEMENT MARKINGS IN THE ROADWAY BY METHOD APPROVED BY THE AUTHORITY HAVING JURISDICTION OR DOT AS APPLICABLE FOR THE LOCATION OF THE WORK.

44. ALL ADA DESIGNATED PARKING STALLS, ACCESS AISLES AND PEDESTRIAN WALKWAYS SHALL CONFORM TO THE CURRENT VERSION OF THE AMERICANS WITH DISABILITIES ACT STANDARDS FOR ACCESSIBLE DESIGN AND ANSI STANDARDS AND AS MAY BE SUPERCEDED BY THE STATE BUILDING CODE.

45. CONSTRUCTION OCCURRING ON THIS SITE SHALL COMPLY WITH NFPA 241 STANDARD FOR SAFEGUARDING CONSTRUCTION, ALTERATION AND DEMOLITION OPERATIONS, AND CHAPTER 16 OF NFPA 1 UNIFORM FIRE CODE.

46. THE CONTRACTOR IS TO MAINTAIN FIRE DEPARTMENT ACCESS TO THE SITE AT ALL TIMES.

47. ALL BUILDINGS, INCLUDING FOUNDATION WALLS AND FOOTINGS AND BASEMENT SLABS INDICATED ON THE DEMOLITION PLAN ARE TO BE REMOVED FROM THE SITE. CONTRACTOR SHALL SECURE ANY PERMITS, PAY ALL FEES AND PERFORM CLEARING AND GRUBBING AND DEBRIS REMOVAL PRIOR TO COMMENCEMENT OF GRADING OPERATIONS.

48. SEDIMENT AND EROSION CONTROLS AS SHOWN ON THE SEDIMENT AND EROSION CONTROL PLAN AND/OR DEMOLITION PLAN SHALL BE INSTALLED BY THE DEMOLITION CONTRACTOR PRIOR TO START OF DEMOLITION AND CLEARING AND GRUBBING OPERATIONS.

49. REMOVE AND DISPOSE OF ANY SIDEWALKS, FENCES, STAIRS, WALLS, DEBRIS AND RUBBISH REQUIRING REMOVAL FROM THE WORK AREA IN AN APPROVED OFF SITE LANDFILL, BY AN APPROVED HAULER. HAULER SHALL COMPLY WITH ALL REGULATORY REQUIREMENTS.

50. THE CONTRACTOR SHALL SECURE ALL PERMITS FOR THE DEMOLITION AND DISPOSAL OF THE DEMOLITION MATERIAL TO BE REMOVED FROM THE SITE. THE CONTRACTOR SHALL POST BONDS AND PAY PERMIT FEES AS REQUIRED. BUILDING DEMOLITION CONTRACTOR SHALL BE RESPONSIBLE FOR PERMITS AND DISPOSAL OF ALL BUILDING DEMOLITION DEBRIS IN AN APPROVED OFF-SITE LANDFILL.

51. ASBESTOS OR HAZARDOUS MATERIAL, IF FOUND ON SITE, SHALL BE REMOVED BY A LICENSED HAZARDOUS MATERIAL ABATEMENT CONTRACTOR.

52. THE CONTRACTOR SHALL PREPARE ALL MANIFEST DOCUMENTS AS REQUIRED PRIOR TO COMMENCEMENT OF DEMOLITION.

53. THE CONTRACTOR SHALL CUT AND PLUG, OR ARRANGE FOR THE APPROPRIATE UTILITY PROVIDER TO CUT AND PLUG ALL SERVICE PIPING AT THE STREET LINE OR AT THE MAIN, AS REQUIRED BY THE UTILITY PROVIDER, OR AS OTHERWISE NOTED OR SHOWN ON THE CONTRACT DRAWINGS. ALL SERVICES MAY NOT BE SHOWN ON THIS PLAN. THE CONTRACTOR SHALL INVESTIGATE THE SITE PRIOR TO BIDDING TO DETERMINE THE EXTENT OF SERVICE PIPING TO BE REMOVED, CUT OR PLUGGED. THE CONTRACTOR SHALL PAY ALL UTILITY PROVIDER FEES FOR ABANDONMENTS AND REMOVALS.

54. THE CONTRACTOR SHALL PROTECT ALL IRON PINS, MONUMENTS AND PROPERTY CORNERS DURING DEMOLITION AND CONSTRUCTION ACTIVITIES. ANY CONTRACTOR DISTURBED PINS, MONUMENTS, AND OR PROPERTY CORNERS, ETC. SHALL BE RESET BY A LICENSED LAND SURVEYOR AT THE EXPENSE OF THE CONTRACTOR.

55. THE DEMOLITION CONTRACTOR SHALL STABILIZE THE SITE AND KEEP EROSION CONTROL MEASURES IN PLACE UNTIL THE COMPLETION OF THE WORK OR UNTIL THE COMMENCEMENT OF WORK BY THE SITE CONTRACTOR, WHICHEVER OCCURS FIRST, AS REQUIRED OR DEEMED NECESSARY BY THE ENGINEER OR OWNER'S REPRESENTATIVE. THE SITE CONTRACTOR SHALL ASSUME RESPONSIBILITY FOR THE MAINTENANCE OF EXISTING EROSION AND SEDIMENTATION CONTROLS AND FOR INSTALLATION OF ANY NEW SEDIMENT AND EROSION CONTROLS AS PER THE SEDIMENT AND EROSION CONTROL PLAN, AT THAT TIME.

56. THE CONTRACTOR SHALL PUMP OUT BUILDING FUEL AND WASTE OIL TANKS (IF ANY ARE ENCOUNTERED) AND REMOVE FUEL TO AN APPROVED DISPOSAL AREA BY A LICENSED WASTE OIL HANDLING CONTRACTOR IN STRICT ACCORDANCE WITH STATE REQUIREMENTS.

57. IF IMPACTED OR CONTAMINATED SOIL IS ENCOUNTERED BY THE CONTRACTOR, THE CONTRACTOR SHALL SUSPEND EXCAVATION WORK OF IMPACTED SOIL AND NOTIFY THE OWNER AND/OR OWNER'S ENVIRONMENTAL CONSULTANT PRIOR TO PROCEEDING WITH FURTHER WORK IN THE IMPACTED SOIL LOCATION UNTIL FURTHER INSTRUCTED BY THE OWNER AND/OR OWNER'S ENVIRONMENTAL CONSULTANT.

58. EXISTING WATER SERVICES SHALL BE DISCONNECTED AND CAPPED AT MAIN IN ACCORDANCE WITH THE REQUIREMENTS OF THE WATER UTILITY PROVIDER. REMOVE EXISTING ONSITE WATER PIPING TO BE ABANDONED TO RIGHT OF WAY LINE UNLESS OTHERWISE SHOWN ON DEMOLITION PLANS OR AS REQUIRED BY THE WATER UTILITY PROVIDER TO BE REMOVED TO MAIN.

59. EXISTING SANITARY LATERAL SHALL BE PLUGGED WITH NON-SHRINK GROUT AT CURB LINE OR AT MAIN CONNECTION IN ACCORDANCE WITH THE SANITARY UTILITY PROVIDER REQUIREMENTS. REMOVE EXISTING LATERAL PIPING FROM SITE UNLESS OTHERWISE SHOWN ON DEMOLITION PLANS OR AS REQUIRED BY THE SANITARY UTILITY PROVIDER.

60. DOMESTIC GAS SERVICES SHALL BE CAPPED AND SERVICE LINES PURGED OF RESIDUAL GAS IN ACCORDANCE WITH THE GAS UTILITY PROVIDER REQUIREMENTS. WORK TO BE COORDINATED BY AND PAID FOR BY THE CONTRACTOR. REMOVE EXISTING SERVICE PIPING ON SITE. ANY PROPANE TANKS SHALL BE PURGED OF RESIDUAL GAS BY PROPANE SUPPLIER. CONTRACTOR SHALL COORDINATE THIS WORK AND PAY NECESSARY FEES.

61. THE CONTRACTOR SHALL PROVIDE DISCONNECT NOTIFICATION TO THE MUNICIPALITY ENGINEERING DEPARTMENT, TELECOMMUNICATIONS UTILITY PROVIDER, GAS UTILITY PROVIDER, ELECTRIC UTILITY PROVIDER, SANITARY UTILITY PROVIDER, AND WATER UTILITY PROVIDER AT LEAST THREE WEEKS PRIOR TO BEGINNING DEMOLITION.

62. THE CONTRACTOR IS RESPONSIBLE FOR SECURING A DEMOLITION PERMIT FROM THE TOWN OF LEDYARD BUILDING DEPARTMENT AND MUST FURNISH THE REQUIRED APPLICATION MATERIAL AND PAY ALL FEES.

63. BACK FILL DEPRESSIONS, FOUNDATION HOLES AND REMOVED DRIVEWAY AREAS IN LOCATIONS NOT SUBJECT TO FURTHER EXCAVATION WITH SOIL MATERIAL APPROVED BY THE OWNER'S GEOTECHNICAL ENGINEER AND COMPACT, FERTILIZE, SEED AND MULCH DISTURBED AREAS NOT SUBJECT TO FURTHER SITE CONSTRUCTION. DEMOLISHED BUILDING FOUNDATION AREA AND BASEMENT IF PRESENT TO BE BACKFILLED WITH GRAVEL FILL OR MATERIAL SPECIFIED IN THE PROJECT GEOTECHNICAL REPORT IN LIFT THICKNESS SPECIFIED IN THE GEOTECHNICAL REPORT. COMPACT TO 95% MAX. DRY DENSITY PER ASTM D1557 AT MOISTURE CONTENT SPECIFIED IN GEOTECHNICAL REPORT AND EARTHWORK SPECIFICATION. EMPLOY WATERING EQUIPMENT FOR DUST CONTROL.

64. THE CONTRACTOR SHALL REPAIR PAVEMENTS BY INSTALLING TEMPORARY AND PERMANENT PAVEMENTS IN PUBLIC RIGHTS OF WAYS AS REQUIRED BY LOCAL GOVERNING AUTHORITIES AND THE MUNICIPALITY AND PER PERMIT REQUIREMENTS DUE TO DEMOLITION AND PIPE REMOVAL ACTIVITIES.

65. THE CONTRACTOR SHALL CUT AND REMOVE AT LUMINARE AND SIGN LOCATIONS ANY PROTRUDING CONDUITS TO 24" BELOW GRADE. THE CONTRACTOR SHALL REMOVE ALL CABLE AND CONDUCTORS FROM REMAINING LIGHTING AND SIGNING CONDUITS TO BE ABANDONED. ANY REMAINING LIGHTING TO REMAIN IN PLACE SHALL BE RECIRCUITED OR REWIRED AS NECESSARY TO REMAIN IN OPERATION.

66. NO WORK ON THIS SITE SHALL BE INITIATED BY THE CONTRACTOR UNTIL A PRE-CONSTRUCTION MEETING WITH OWNER AND THE CIVIL ENGINEER IS PERFORMED. THE CONTRACTOR SHOULD BE AWARE OF ANY SITE INFORMATION AVAILABLE SUCH AS GEOTECHNICAL AND ENVIRONMENTAL REPORTS. THE CONTRACTOR SHALL HAVE CBYD MARK OUTS OF EXISTING UTILITIES COMPLETED PRIOR TO MEETING.

67. THE CONTRACTOR SHALL ARRANGE FOR AND INSTALL TEMPORARY OR PERMANENT UTILITY CONNECTIONS WHERE INDICATED ON PLAN OR AS REQUIRED. MAINTAIN UTILITY SERVICES TO BUILDINGS OR TO SERVICES TO REMAIN. CONTRACTOR TO COORDINATE WITH UTILITY PROVIDERS FOR INSTALLATION AND PAY UTILITY PROVIDER FEES.

68. THE CONTRACTOR SHALL NOT COMMENCE DEMOLITION OR UTILITY DISCONNECTIONS UNTIL AUTHORIZED TO DO SO BY THE OWNER.

69. THE CONTRACTOR OR DEMOLITION CONTRACTOR SHALL INSTALL TEMPORARY SHEETING OR SHORING AS NECESSARY TO PROTECT EXISTING AND NEW BUILDINGS, STRUCTURES AND UTILITIES DURING CONSTRUCTION AND DEMOLITION. SHEETING OR SHORING SHALL BE DESIGNED BY A PROFESSIONAL ENGINEER, LICENSED IN THIS STATE AND EVIDENCE OF SUCH SUBMITTED TO THE OWNER PRIOR TO INSTALLATION.

70. NO SALVAGE SHALL BE PERMITTED UNLESS PAID TO THE OWNER AS A CREDIT.

71. ANY EXISTING POTABLE WELL AND ANY EXISTING SEPTIC TANKS/ABSORPTION AREAS SHALL BE ABANDONED AND REMOVED PER THE TOWN OF LEDYARD AND HEALTH CODE REQUIREMENTS.

72. THE CONTRACTOR SHALL PRESERVE EXISTING VEGETATION WHERE POSSIBLE AND/OR AS NOTED ON DRAWINGS. REFER TO SEDIMENT AND EROSION CONTROL PLAN FOR LIMIT OF DISTURBANCE AND EROSION CONTROL NOTES.

73. TOPSOIL SHALL BE STRIPPED AND STOCKPILED ON SITE FOR USE IN FINAL LANDSCAPING.

74. THE CONTRACTOR SHALL COMPACT FILL IN LIFT THICKNESS PER THE GEOTECHNICAL REPORT UNDER ALL PARKING, BUILDING, DRIVE, AND STRUCTURE AREAS TO 95% OF THE MAXIMUM DRY DENSITY AS DETERMINED BY ASTM D1557 (MODIFIED PROCTOR TEST), OR AS REQUIRED BY THE GEOTECHNICAL ENGINEER.

75. UNDERDRAINS SHALL BE ADDED, IF DETERMINED NECESSARY IN THE FIELD BY THE OWNER/GEOTECHNICAL ENGINEER, AFTER SUBGRADE IS ROUGH GRADED.

76. VERTICAL DATUM IS NAVD 88.

77. CLEARING LIMITS SHALL BE PHYSICALLY MARKED IN THE FIELD AND APPROVED BY THE TOWN OF LEDYARD AGENT PRIOR TO THE START OF WORK ON THE SITE.

78. PROPER CONSTRUCTION PROCEDURES SHALL BE FOLLOWED ON ALL IMPROVEMENTS WITHIN THIS PARCEL SO AS TO PREVENT THE SILTING OF ANY WATERCOURSE OR WETLANDS IN ACCORDANCE WITH THE REGULATIONS OF THE CT DEEP AND THE 2023 CONNECTICUT GUIDELINES FOR SOIL EROSION AND SEDIMENT CONTROL, LATEST EDITION. IN ADDITION, THE CONTRACTOR SHALL STRICTLY ADHERE TO THE SEDIMENT AND EROSION CONTROL PLAN CONTAINED HEREIN. THE CONTRACTOR SHALL BE RESPONSIBLE TO POST ALL BONDS AS REQUIRED BY THE LOCAL MUNICIPALITIES, OR SOIL CONSERVATION DISTRICT WHICH WOULD GUARANTEE THE PROPER IMPLEMENTATION OF THE PLAN.

79. ALL SITE WORK, MATERIALS OF CONSTRUCTION, AND CONSTRUCTION METHODS FOR EARTHWORK AND STORM DRAINAGE WORK SHALL CONFORM TO THE SPECIFICATIONS AND DETAILS AND APPLICABLE SECTIONS OF THE PROJECT SPECIFICATIONS MANUAL. OTHERWISE THIS WORK SHALL CONFORM TO THE CONNECTICUT DEPARTMENT OF TRANSPORTATION SPECIFICATIONS AND PROJECT GEOTECHNICAL REPORT IF THERE IS NO PROJECT SPECIFICATIONS MANUAL. ALL FILL MATERIAL UNDER STRUCTURES AND PAVED AREAS SHALL BE PER THE ABOVE STATED APPLICABLE SPECIFICATIONS, AND/OR PROJECT GEOTECHNICAL REPORT, AND SHALL BE PLACED IN ACCORDANCE WITH THE APPLICABLE SPECIFICATIONS UNDER THE SUPERVISION OF A QUALIFIED PROFESSIONAL ENGINEER. MATERIAL SHALL BE COMPACTED IN LIFT THICKNESSES PER THE PROJECT GEOTECHNICAL REPORT TO 95% OF THE MAXIMUM DRY DENSITY AS DETERMINED BY ASTM D 1557 AT MOISTURE CONTENT INDICATED IN PROJECT GEOTECHNICAL REPORT.

80. ALL DISTURBANCE INCURRED TO MUNICIPAL AND STATE PROPERTY DUE TO CONSTRUCTION SHALL BE RESTORED TO ITS PREVIOUS CONDITION OR BETTER, TO THE SATISFACTION OF THE MUNICIPALITY AND STATE AS APPLICABLE FOR THE LOCATION OF THE WORK.

81. ALL CONSTRUCTION WITHIN A DOT RIGHT OF WAY SHALL COMPLY WITH ALL DEPARTMENT OF TRANSPORTATION STANDARDS AND SPECIFICATIONS.

82. THE UTILITY PLAN DETAILS SITE INSTALLED PIPES UP TO 5' FROM THE BUILDING FACE. REFER TO DRAWINGS BY ARCHITECT FOR BUILDING CONNECTIONS. SITE CONTRACTOR SHALL SUPPLY AND INSTALL PIPE ADAPTERS AS NECESSARY AT BUILDING CONNECTION POINT OR AT EXISTING UTILITY OR PIPE CONNECTION POINT.

83. THE CONTRACTOR SHALL VISIT THE SITE AND VERIFY THE ELEVATION AND LOCATION OF ALL UTILITIES BY VARIOUS MEANS PRIOR TO BEGINNING ANY EXCAVATION. TEST PITS SHALL BE DUG AT ALL PROPOSED UTILITY CROSSINGS AND EARTHWORK OVER EXISTING UTILITIES TO REMAIN. TEST PITS SHALL BE USED TO DETERMINE THE HORIZONTAL AND VERTICAL LOCATIONS OF THE UTILITIES. THE CONTRACTOR SHALL CONTACT THE CIVIL ENGINEER IN THE EVENT OF ANY DISCOVERED OR UNFORESEEN CONFLICTS BETWEEN UTILITIES.

84. UTILITY CONNECTION DESIGN AS REFLECTED ON THE PLAN MAY CHANGE SUBJECT TO UTILITY PROVIDER AND GOVERNING AUTHORITY STAFF REVIEW.

85. THE CONTRACTOR SHALL ENSURE THAT ALL UTILITY PROVIDERS AND GOVERNING AUTHORITY STANDARDS FOR MATERIALS AND CONSTRUCTION METHODS ARE MET. THE CONTRACTOR SHALL PERFORM PROPER COORDINATION WITH THE RESPECTIVE UTILITY PROVIDER.

86. THE CONTRACTOR SHALL ARRANGE FOR AND COORDINATE WITH THE RESPECTIVE UTILITY PROVIDERS FOR SERVICE INSTALLATIONS AND CONNECTIONS. THE CONTRACTOR SHALL COORDINATE WORK TO BE PERFORMED BY THE VARIOUS UTILITY PROVIDERS AND SHALL PAY ALL FEES FOR CONNECTIONS, DISCONNECTIONS, RELOCATIONS, INSPECTIONS, AND DEMOLITION UNLESS OTHERWISE STATED IN THE PROJECT SPECIFICATIONS MANUAL AND/OR GENERAL CONDITIONS OF THE CONTRACT.

87. ALL EXISTING PAVEMENT WHERE UTILITY PIPING IS TO BE INSTALLED SHALL BE SAW CUT. AFTER UTILITY INSTALLATION IS COMPLETED, THE CONTRACTOR SHALL INSTALL TEMPORARY AND/OR PERMANENT PAVEMENT REPAIR AS DETAILED ON THE DRAWINGS OR AS REQUIRED BY THE OWNER HAVING JURISDICTION.

88. ALL PIPES SHALL BE LAID ON STRAIGHT ALIGNMENTS AND EVEN GRADES USING A PIPE LASER OR OTHER ACCURATE METHOD.

89. SANITARY LATERAL SHALL MAINTAIN (10' MIN. HORIZONTAL 1.5' VERTICAL MIN.) SEPARATION DISTANCE FROM WATER LINES, OR ADDITIONAL PROTECTION MEASURES WILL BE REQUIRED WHERE PERMITTED, WHICH SHALL INCLUDE CONCRETE ENCASEMENT OF PIPING UNLESS OTHERWISE DIRECTED BY THE UTILITY PROVIDERS AND CIVIL ENGINEER.

90. RELOCATION OF UTILITY PROVIDER FACILITIES SHALL BE DONE IN ACCORDANCE WITH THE REQUIREMENTS OF THE UTILITY PROVIDER.

91. THE CONTRACTOR SHALL COMPACT THE PIPE BACKFILL IN 8" LIFTS ACCORDING TO THE PIPE BEDDING DETAILS. TRENCH BOTTOM SHALL BE STABLE IN HIGH GROUNDWATER AREAS. A PIPE FOUNDATION SHALL BE USED PER THE TRENCH DETAILS AND IN AREAS OF ROCK EXCAVATION.

92. CONTRACTOR TO PROVIDE STEEL SLEEVES AND ANNULAR SPACE SAND FILL FOR UTILITY PIPE AND CONDUIT CONNECTIONS UNDER FOOTINGS.

93. BUILDING UTILITY PENETRATIONS AND LOCATIONS ARE SHOWN FOR THE CONTRACTOR'S INFORMATION AND SHALL BE VERIFIED WITH THE BUILDING MEP, STRUCTURAL, AND ARCHITECTURAL DRAWINGS AND WITH THE OWNER'S CONSTRUCTION MANAGER.

94. ALL UTILITY CONSTRUCTION IS SUBJECT TO INSPECTION FOR APPROVAL PRIOR TO BACKFILLING, IN ACCORDANCE WITH THE APPROPRIATE UTILITY PROVIDER REQUIREMENTS.

95. A ONE-FOOT MINIMUM VERTICAL CLEARANCE BETWEEN WATER, GAS, ELECTRICAL, AND TELEPHONE LINES AND STORM PIPING SHALL BE PROVIDED. A SIX-INCH MINIMUM CLEARANCE SHALL BE MAINTAINED BETWEEN STORM PIPING AND SANITARY SEWER WITH A CONCRETE ENCASEMENT. AN 18-INCH TO 6-INCH VERTICAL CLEARANCE BETWEEN SANITARY SEWER PIPING AND STORM PIPING SHALL REQUIRE CONCRETE ENCASEMENT OF THE PROPOSED PIPING.

96. GRAVITY SANITARY SEWER PIPING AND PRESSURIZED WATERLINES SHALL BE LOCATED IN SEPARATE TRENCHES AT LEAST 10 FEET APART WHENEVER POSSIBLE. WHEN INSTALLED IN THE SAME TRENCH, THE WATER PIPE SHALL BE LAID ON A TRENCH BENCH AT LEAST 18 INCHES ABOVE THE TOP OF THE SANITARY SEWER PIPE AND AT LEAST 12 INCHES (PREFERABLY 18 INCHES) FROM THE SIDE OF THE SANITARY SEWER PIPE TRENCH.

97. SITE CONTRACTOR SHALL PROVIDE ALL BENDS, FITTINGS, ADAPTERS, ETC., AS REQUIRED FOR PIPE CONNECTIONS TO BUILDING STUB OUTS, INCLUDING ROOF/FOOTING DRAIN CONNECTIONS TO ROOF LEADERS AND TO STORM DRAINAGE SYSTEM.

98. MANHOLE RIMS AND CATCH BASIN GRATES SHALL BE SET TO ELEVATIONS SHOWN. SET ALL EXISTING MANHOLE RIMS AND VALVE COVERS TO BE RAISED OR LOWERED FLUSH WITH FINAL GRADE AS NECESSARY.

99. SITE CONTRACTOR SHALL COORDINATE INSTALLATION OF CONDUIT AND CABLES FOR SITE LIGHTING WITH THE BUILDING ELECTRICAL CONTRACTOR.

100. CONTRACTOR SHALL COORDINATE INSTALLATION FOR ELECTRICAL SERVICES TO PYLON SIGNS AND SITE LIGHTING WITH THE BUILDING ELECTRICAL CONTRACTOR.

101. THE CONTRACTOR SHALL ARRANGE AND COORDINATE WITH UTILITY PROVIDERS FOR WORK TO BE PERFORMED BY UTILITY PROVIDERS. THE CONTRACTOR SHALL PAY ALL UTILITY FEES UNLESS OTHERWISE STATED IN THE PROJECT SPECIFICATION MANUAL AND GENERAL CONDITIONS, AND REPAIR PAVEMENTS AS NECESSARY.

102. ELECTRIC, AND TELECOMMUNICATIONS SERVICES SHALL BE INSTALLED UNDERGROUND IN ACCORDANCE WITH LOCAL UTILITY PROVIDER REGULATIONS. THE CONTRACTOR SHALL PROVIDE AND INSTALL AND BACKFILL PVC CONDUITS FOR TELECOMMUNICATIONS SERVICE, PVC CONDUITS FOR ELECTRIC SERVICE PRIMARY, PVC CONDUITS FOR ELECTRICAL SECONDARY PER BUILDING ELECTRICAL PLANS, (SCHEDULE 80 UNDER PAVEMENT, SCHEDULE 40 IN NON PAVEMENT AREAS). SERVICES MAY BE INSTALLED IN A COMMON TRENCH WITH 12" CLEAR SPACE BETWEEN. MINIMUM COVER IS 36" ON ELECTRIC CONDUITS, AND 24" ON TELECOMMUNICATIONS CONDUITS. SERVICES SHALL BE MARKED WITH MAGNETIC LOCATOR TAPE AND SHALL BE BEDDED, INSTALLED, AND BACKFILLED IN ACCORDANCE WITH ELECTRIC UTILITY PROVIDER, AND TELECOMMUNICATIONS COMPANY STANDARDS. GALVANIZED STEEL ELECTRICAL CONDUIT SHALL BE USED AT POLE AND TRANSFORMER LOCATIONS. INSTALL HANDHOLES AS REQUIRED TO FACILITATE INSTALLATION AND AS REQUIRED BY UTILITY PROVIDER. INSTALL TRAFFIC LOAD QUALIFIED HANDHOLES IN VEHICULAR AREAS. INSTALL CONCRETE ENCASEMENT ON PRIMARY ELECTRIC CONDUITS IF REQUIRED BY ELECTRIC UTILITY PROVIDER.

103. ALL WATER LINES TO HAVE A MINIMUM COVER OF 4.5'. ALL LINES SHALL BE BEDDED AND BACKFILLED IN ACCORDANCE WITH LOCAL UTILITY AND/OR MANUFACTURER REQUIREMENT.

104. ALL WATER MAINS, WATER SERVICES AND SANITARY SEWER LATERALS SHALL CONFORM TO THE APPLICABLE WATER UTILITY PROVIDER SPECIFICATIONS, AND TO THE APPLICABLE SANITARY SEWER PROVIDER SPECIFICATIONS, AS WELL AS TO OTHER APPLICABLE INDUSTRY CODES (AWWA) AND PROJECT SPECIFICATIONS FOR POTABLE WATER SYSTEMS, AND FOR SANITARY SEWER SYSTEMS.

105. THE CONTRACTOR SHALL MAINTAIN ALL FLOWS AND UTILITY CONNECTIONS TO EXISTING BUILDINGS WITHOUT INTERRUPTION UNLESS/UNTIL AUTHORIZED TO DISCONNECT BY THE OWNERS, THE CIVIL ENGINEER, UTILITY PROVIDERS AND GOVERNING AUTHORITIES.

106. THE CONTRACTOR MAY SUBSTITUTE MASONRY STRUCTURES FOR PRECAST STRUCTURES IF APPROVED BY THE CIVIL ENGINEER AND ALLOWED BY THE GOVERNING AUTHORITY ENGINEER OR OTHER GOVERNING AUTHORITY.

107. PIPING SHALL BE LAID FROM DOWNGRADIENT END OF PIPE RUN IN AN UPGRADIENT DIRECTION WITH BELL END FACING UPGRADE IN THE DIRECTION OF PIPE LAYING.

108. MANHOLE SECTIONS AND CONSTRUCTION SHALL CONFORM TO ASTM C-478.

109. HIGH DENSITY POLYETHYLENE (HDPE) STORM SEWER LESS THAN 12" IN DIAMETER SHALL BE ADS N-12 WT OR APPROVED EQUAL. HDPE PIPE SHALL HAVE SMOOTH INTERIOR AND CORRUGATED EXTERIOR AND SHALL MEET THE REQUIREMENTS OF AASHTO 252, WATERTIGHT TYPE. GASKETS SHALL BE INSTALLED ON THE CONNECTION BY THE PIPE MANUFACTURER. ALTERNATIVE HDPE PIPE MAY BE USED IF APPROVED BY THE ENGINEER AND OWNER'S CONSTRUCTION MANAGER PRIOR TO ORDERING.

110. HIGH DENSITY POLYETHYLENE (HDPE) STORM SEWER GREATER THAN 12" IN DIAMETER SHALL BE ADS N-12 WT OR APPROVED EQUAL. HDPE PIPE SHALL HAVE SMOOTH INTERIOR AND CORRUGATED EXTERIOR AND SHALL MEET THE REQUIREMENTS OF AASHTO 294, WATERTIGHT TYPE. GASKETS SHALL BE INSTALLED ON THE CONNECTION BY THE PIPE MANUFACTURER. ALTERNATIVE HDPE PIPE MAY BE USED IF APPROVED BY THE ENGINEER AND OWNER'S CONSTRUCTION MANAGER PRIOR TO ORDERING.

111. COPPER PIPE SHALL BE TYPE K TUBING WITH COMPRESSION FITTINGS.

112. PE WATER PIPING SHALL CONFORM TO AWWA C901.

113. POLYVINYL CHLORIDE (PVC) PIPE FOR SANITARY PIPING SHALL HAVE BUILT-IN RUBBER GASKET JOINTS. PVC SHALL CONFORM TO ASTM D3034 (SDR35) WITH COMPRESSION JOINTS AND MOLDED FITTINGS. PVC SHALL BE INSTALLED IN ACCORDANCE WITH THE DETAILS, ASTM D2321 AND MANUFACTURER'S RECOMMENDED PROCEDURE.

126. SANITARY FORCE MAIN PIPING SHALL CONFORM TO THE REQUIREMENTS OF AWWA C900, ASTM D1784, AND ASTM D2241. PIPE SHALL BE TYPE PSM, RIGID POLY VINYL CHLORIDE (PVC) MATERIAL WITH INTEGRALLY FORMED, FACTORY FABRICATED, OR TWICE GASKETED COUPLING TYPE, RUBBER RING TYPE JOINTS. PVC FORCE MAIN PIPE SHALL HAVE A MINIMUM WALL THICKNESS OF DR 18 AND SHALL BE CLASS 150. PIPE SHALL BE TYPE I, GRADE I AND SHALL BE MADE FROM CLEAR VIRGIN MATERIAL. PVC MATERIAL SHALL HAVE A CELL CLASSIFICATION OF 12454-B OR C AS DEFINED IN ASTM D-1784.

127. DUCTILE IRON PIPE FOR WATER PIPING SHALL CONFORM TO LOCAL JURISDICTION OR AWWA C151 FOR CLASS 52 WITH CEMENT LINING IN ACCORDANCE WITH ANSI A21.4 FOR WATER MAINS AND SERVICES 3" ID AND LARGER. JOINTS SHALL BE MADE WITH CONCRETE THRUST BLOCKS OR WITH MEGAULUG RETAINER GLANDS OR WITH RODDING IN ACCORDANCE WITH PROJECT MANUAL SPECIFICATIONS AND IN ACCORDANCE WITH WATER UTILITY PROVIDER REQUIREMENTS TO EXTEND A MINIMUM OF 2 PIPE LENGTHS IN EITHER DIRECTION FROM FITTINGS AND ELBOWS (40 FT MINIMUM). ALL OTHER JOINTS SHALL BE PUSH-ON WITH RUBBER GASKETS (TYTON). USE OF OTHER TYPES OF RETAINER GLANDS SHALL REQUIRE USE WITH CLASS 53 OR GREATER DUCTILE IRON PIPE.

126. PVC WATER MAIN PIPING SHALL CONFORM TO AWWA C900.

127. GAS PIPE MATERIAL SHALL BE PER GAS COMPANY REQUIREMENTS.

DEFINITIONS

MUNICIPALITY SHALL MEAN TOWN OF LEDYARD

COUNTY SHALL MEAN NEW LONDON COUNTY

STATE SHALL MEAN STATE OF CONNECTICUT

WATER UTILITY PROVIDER SHALL MEAN LEDYARD WPCA

SANITARY UTILITY PROVIDER SHALL MEAN LEDYARD WPCA

GAS UTILITY PROVIDER SHALL MEAN EVERSOURCE GAS

TELECOMMUNICATIONS UTILITY PROVIDER SHALL MEAN AT&T

ELECTRIC UTILITY PROVIDER SHALL MEAN EVERSOURCE ENERGY

DOT SHALL MEAN THE CONNECTICUT DEPARTMENT OF TRANSPORTATION

FOR PERMITTING PURPOSES ONLY
NOT RELEASED FOR CONSTRUCTION

Architecture
Engineering
Environmental
Land Surveying

BL Companies

355 Research Parkway
Meriden, CT 06450
(203) 630-1406

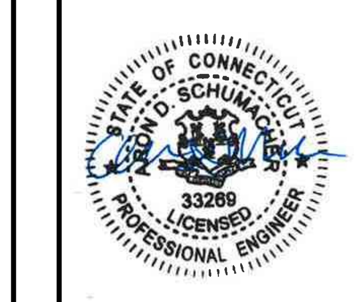

PROPOSED MULTI-FAMILY RESIDENTIAL DEVELOPMENT
1947 CENTER GROTON ROAD
LEDYARD, CT 06339

REVISIONS

No.	Date	Desc.

Designed	M.A.G.
Drawn	M.A.G.
Reviewed	R.M.R.
Scale	NONE
Project No.	2502197
Date	04/01/2026
CAD File:	G2502197-01

Title
GENERAL NOTES

Sheet No.
G0.01

Xref (s): ; XB2502197-00

4/1/2026, TRICCITELLI, G:\JOBS25\20\2502197\DWG\G2502197-01.DWG.G0.01 24X36.

©2026 BL COMPANIES, INC. THESE DRAWINGS SHALL NOT BE UTILIZED BY ANY PERSON, FIRM OR CORPORATION WITHOUT THE SPECIFIC WRITTEN PERMISSION OF BL COMPANIES.

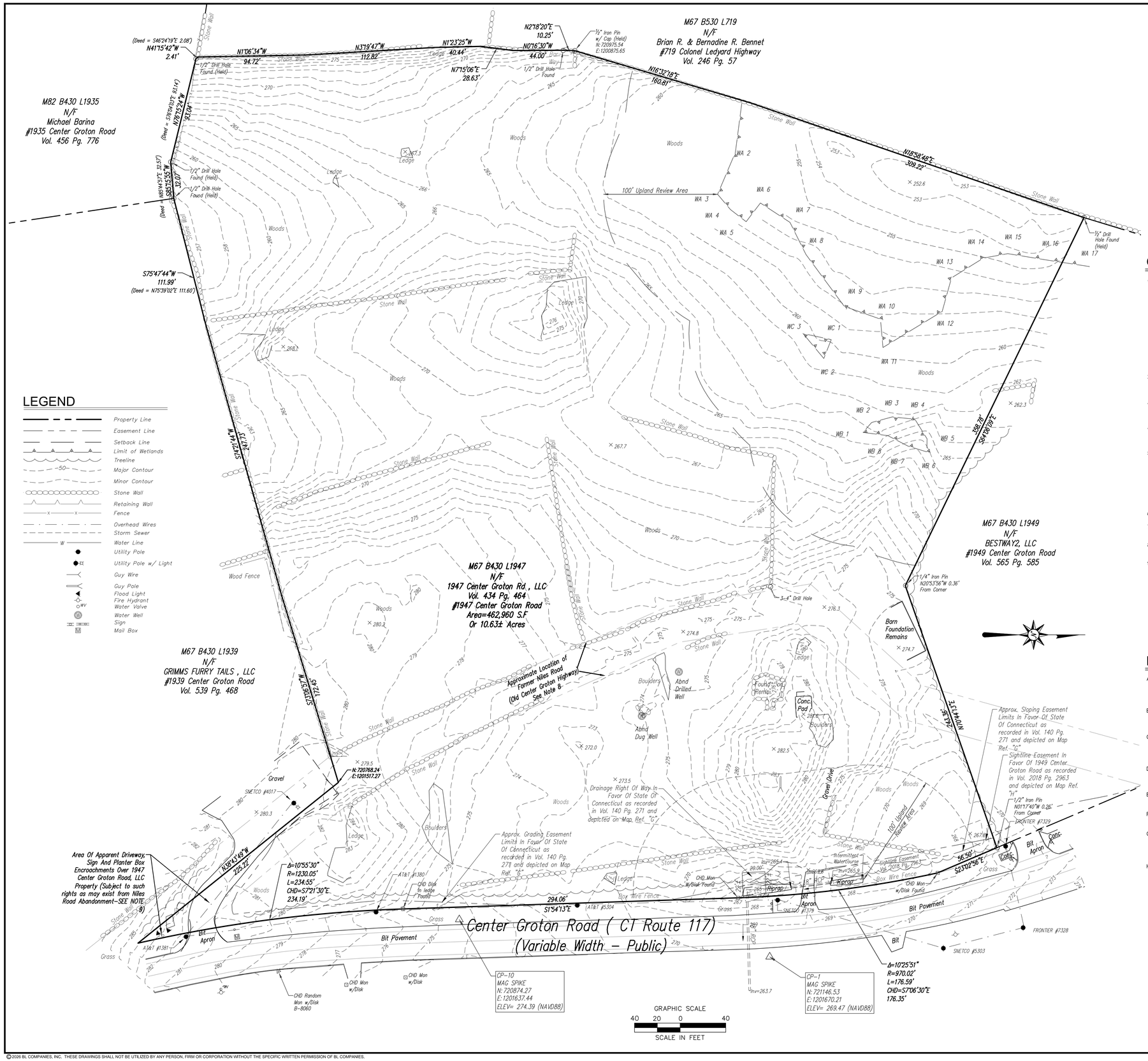

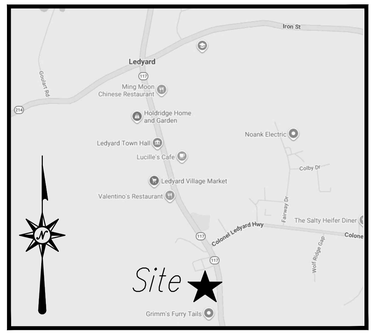

LOCATION MAP

NOT TO SCALE

LEGEND

- Property Line
- Easement Line
- Setback Line
- Limit of Wetlands
- Treeline
- Major Contour
- Minor Contour
- Stone Wall
- Retaining Wall
- Fence
- Overhead Wires
- Storm Sewer
- Water Line
- Utility Pole
- Utility Pole w/ Light
- Guy Wire
- Guy Pole
- Flood Light
- Fire Hydrant
- Water Valve
- Water Well
- Sign
- Mail Box

GENERAL NOTES

1. A) THIS MAP HAS BEEN PREPARED IN ACCORDANCE WITH THE REGULATIONS OF CONNECTICUT STATE AGENCIES, SECTIONS 20-300b-1 THROUGH 20-300b-20 AND THE "STANDARDS AND SUGGESTED METHODS AND PROCEDURES FOR SURVEYS AND MAPS IN THE STATE OF CONNECTICUT" PREPARED AND ADOPTED BY THE CONNECTICUT ASSOCIATION OF LAND SURVEYORS, INC. AUGUST 29, 2019.

   A) THIS PLAN CONFORMS TO HORIZONTAL ACCURACY CLASS A-2 AND TOPOGRAPHIC ACCURACY CLASS T-2.

   B) BOUNDARY DETERMINATION IS BASED UPON A RESURVEY.

   C) THE TYPE OF SURVEY PERFORMED IS A PROPERTY / TOPOGRAPHIC SURVEY INTENDED TO DEPICT THE EXISTING PROPERTY WITH RESPECT TO MONUMENTATION FOUND, STRUCTURES, EASEMENTS, ENCROACHMENTS, VISIBLE UTILITIES, ROADWAYS AND CONTOURS.

2. NORTH ARROW AND BEARINGS REFER TO THE CONNECTICUT STATE PLANE COORDINATE SYSTEM (CT NAD 83 – EPOCH 11) AND ARE BASED ON LEICA SMARTNET VRS GPS OBSERVATIONS PERFORMED BY BL COMPANIES IN JANUARY 2026.

3. ELEVATIONS AND CONTOURS REFER TO THE NORTH AMERICAN VERTICAL DATUM OF 1988 (NAVD 88-GEOID 18) AND ARE BASED ON GNSS OBSERVATIONS PERFORMED BY BL COMPANIES IN JANUARY 2026 UTILIZING THE LEICA SMARTNET VRS SYSTEM.

4. PARCEL IS LOCATED IN A FLOOD HAZARD AREA "X", (AREAS DETERMINED TO BE OUTSIDE THE 0.2% ANNUAL CHANCE FLOODPLAIN)AS DEPICTED ON FIRM COMMUNITY PANEL NO. 090157 PANEL 367 OF 554 EFFECTIVE: JULY 18, 2011.

5. THE UNDERGROUND UTILITIES DEPICTED HAVE BEEN PLOTTED FROM FIELD SURVEY INFORMATION AND EXISTING DRAWINGS. THE SURVEYOR MAKES NO GUARANTEES THAT THE UNDERGROUND UTILITIES DEPICTED COMPRISE ALL SUCH UTILITIES IN THE AREA, EITHER IN SERVICE OR ABANDONED. THE SURVEYOR FURTHER DOES NOT WARRANT THAT THE UNDERGROUND UTILITIES DEPICTED ARE IN THE EXACT LOCATION INDICATED THOUGH THEY ARE PLOTTED AS ACCURATELY AS POSSIBLE FROM INFORMATION AVAILABLE. THE SURVEYOR HAS NOT PHYSICALLY EXPOSED THE UNDERGROUND UTILITIES. PER CONNECTICUT STATE LAW THE CONTRACTOR SHALL CONFIRM THE LOCATION OF ALL UTILITIES PRIOR TO THE COMMENCEMENT OF EXCAVATION. CALL BEFORE YOU DIG 1-800-922-4455.

6. WETLANDS FLAGGED BY BL COMPANIES IN JANUARY 2026.

7. 1939 CENTER GROTON ROAD DRIVEWAY WAS RECONSTRUCTED IN IT'S CURRENT LOCATION PER THE STATE DEPARTMENT OF TRANSPORTATION PER MAP REFERENCE G.

8. NILES ROAD WAS ABANDONED BY PLANNING COMMISSION VOTE 5-0 ON NOVEMBER 5, 2009 AND DURING A TOWN COUNCIL MEETING VOTE 9-0 ON FEBRUARY 24, 2010.

9. NOTE: A PORTION OF THE SOUTHERLY PROPERTY LINE EXTENDING TO THE CENTER OF THE ABANDONED NILES ROAD CAUSES A PORTION OF THE DRIVEWAY TO APPARENTLY ENCROACH ONTO THE SUBJECT PROPERTY. NO EASEMENT WAS FOUND FOR THIS BUT MAY BE SUBJECT TO SUCH RIGHTS OR APPARENT ACCESS EASEMENT LEADING TO BOTH THE SUBJECT PROPERTY AND THE ADJOINING PROPERTY ALONG THE FORMER NILES ROAD (ABANDONED) PER THE DRIVEWAY REALIGNMENT DESIGN BY CDOT DEPICTED ON MAP REF G AND DESCRIBED IN DEED VOL. 140 AT PAGE 271.

MAP REFERENCES

A. "PROPERTY SURVEY PROPOSED LOT SPLIT, 1947 CENTER GROTON ROAD, LEDYARD, CT, SHEET 1 OF 1, SCALE 1"=50', DATED MAY 30, 2017, REVISED AUGUST 2017, PREPARED BY WESTCOTT AND MAPES, INC. NEW HAVEN, CT, AND FILED AS MAP#2923 IN THE TOWN OF LEDYARD CLERKS OFFICE

B. "PROPERTY SURVEY PROPERTY OF MAUREEN RUTH MARSH, 1947 CENTER GROTON ROAD,(CONNECTICUT ROUTE 117) LEDYARD, CT", SCALE 1"=50', DATED FEBRUARY 18, 2004, REVISED 12/19/2006, PREPARED BY DICESARE BENTLEY

C. " CONNECTICUT DEPARTMENT OF TRANSPORTATION RIGHT OF WAY MAP, TOWN OF LEDYARD, CENTER GROTON ROAD, FROM THE GROTON TOWN LINE NORTHERLY TO THE COLONEL LEDYARD HIGHWAY" SHEETS 12, 13 AND 14 OF 14, SCALE 1"=40', DATED APRIL 1987, NOTED PRELIMINARY

D. " PLAN SHOWNG SUBDIVISION PROPERTY OF BRIAN R, BENNET AND BERNADINE R. BENNET, 719 COLONEL LEDYARD HIGHWAY, LEDYARD CT, SCALE 1"=40', DATED MAY 2011 REVISED AUGUST 1, 2011 BY DIETER & GARDNER

E. "PROPERTY/TOPOGRAPHIC SURVEY ,1939 CENTER GROTON ROAD, LEDYARD CT," SCALE 1"=30', DATED 9/22/2005, BY WESTCOTT AND MAPES, INC.

F. "PROPERTY OF BRIAN R, BENNET AND BERNADINE R. BENNET, CONNECTICUT ROUTE 117, LEDYARD CT, SCALE 1"=50', DATED OCT 1988, BY JOHN KOPKO JR. & ASSOCIATES".

G. "TOWN OF LEDYARD MAP SHOWING LAND ACQUIRED FROM HENRY W. MARSH ET AL, BY THE STATE OF CONNECTICUT, RECONSTRUCTION OF CONN. 117" SCALE 1"=40', DATED APRIL 1983, REVISED 11/8/198, TOWN NO. 71, PROJECT NO. 71-73, SERIAL NO. 68, SHEET 1 OF 1 AND FILED IN THE TOWN OF LEDYARD CLERKS OFFICE AS VOL. 140 PG. 271

H. "SIGHTLINE EASEMENT PLAN OVER PROPERTY OF 1947 CENTER GROTON ROAD, LLC IN FAVOR OF 1949 CENTER GROTON ROAD, LEDYARD, CONNECTICUT, SCALE:1 "=40', DATE: APRIL 2018" PREPARED BY DIETER & GARDINER AND RECORDED IN VOL. 2018 PG 2963 TOWN OF LEDYARD CLERKS OFFICE.

STATE OF CONNECTICUT
DONALD A. SMITH
No. 70206
LICENSED
LAND SURVEYOR

TO MY KNOWLEDGE AND BELIEF THIS MAP IS SUBSTANTIALLY CORRECT AS NOTED HEREON.

DONALD A. SMITH, L.S. #70206

NO CERTIFICATION IS EXPRESSED OR IMPLIED UNLESS THIS MAP BEARS THE ORIGINAL SIGNATURE AND EMBOSSED SEAL OF THE ABOVE NAMED LAND SURVEYOR.

Architecture
Engineering
Environmental
Land Surveying
BL Companies

355 Research Parkway
Meriden, CT 06450
(203) 630-1406

LAND OF
1947 CENTER GROTON ROAD, LLC
1947 CENTER GROTON ROAD
TOWN OF LEDYARD, COUNTY OF NEW LONDON,
STATE OF CONNECTICUT

Disc: Update to depict Slope and Grading Easement limits

REVISIONS	
No.	Date
1	2-13-2026

Surveyed	S.C.,F.P.
Drawn	S.C.
Reviewed	D.A.S.,W.A.T.
Scale	1"=40'
Project No.	2502197
Date	01/13/2026
Field Book	599
CAD File:	EX250219701

Title

PROPERTY / TOPOGRAPHIC SURVEY

Sheet No. 1 OF 1

EX-1

Feb 10, 2026 3:37pm DSmith G:\JOBS25\25\2502197\DWG\EX250219701.dwg
Layout: EX-1 (24x36) 1:50

Xref(s) : XY250219701

© 2026 BL COMPANIES, INC. THESE DRAWINGS SHALL NOT BE UTILIZED BY ANY PERSON, FIRM OR CORPORATION WITHOUT THE SPECIFIC WRITTEN PERMISSION OF BL COMPANIES.

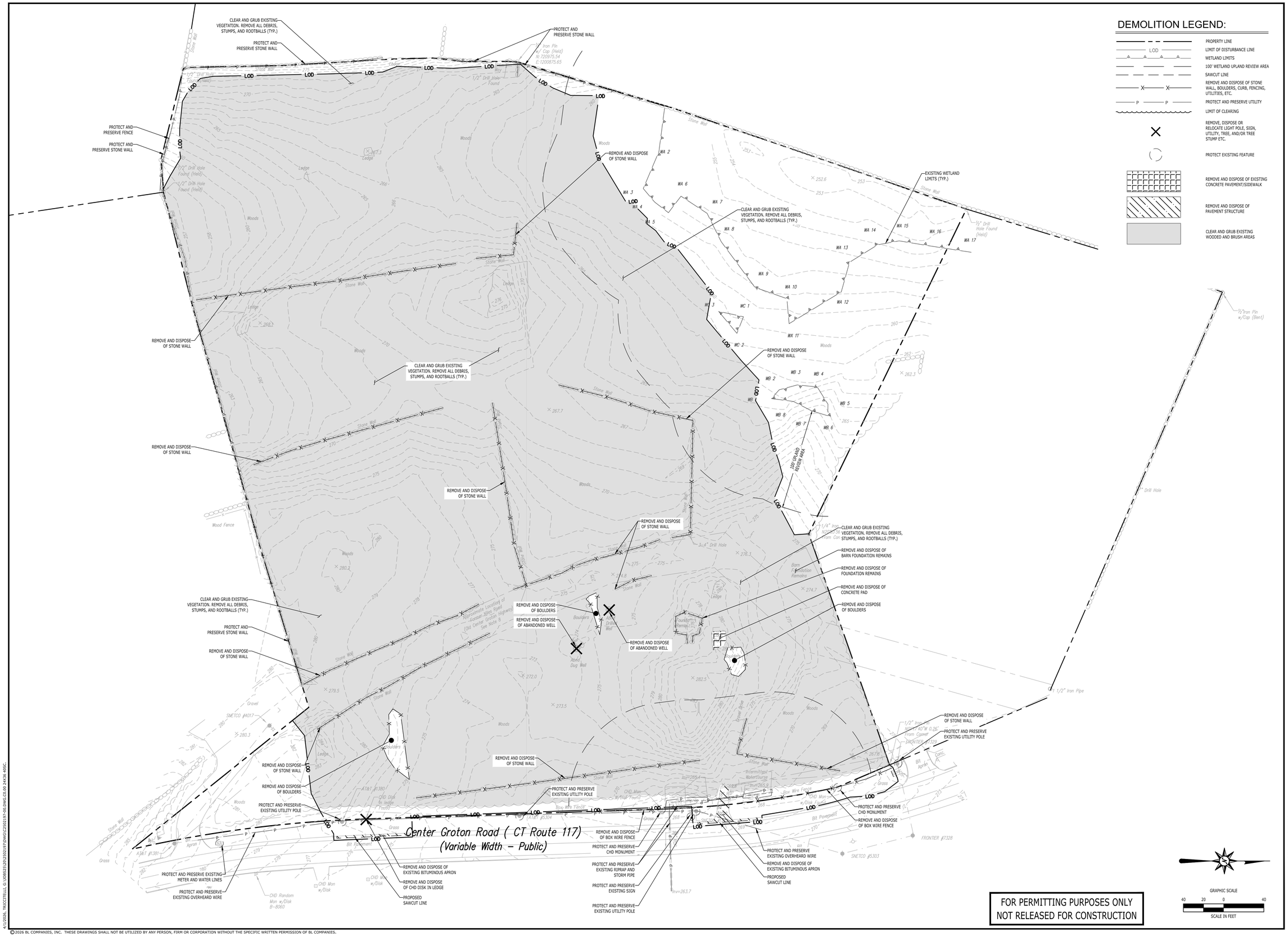

Architecture
Engineering
Environmental
Land Surveying
BL Companies
355 Research Parkway
Meriden, CT 06450
(203) 630-1406

STATE OF CONNECTICUT
RICHARD A. SCHUMACHER
33286
LICENSED
PROFESSIONAL ENGINEER

PROPOSED MULTI-FAMILY RESIDENTIAL DEVELOPMENT
1947 CENTER GROTON ROAD
LEDYARD, CT 06339

REVISIONS		
No.	Date	Desc.

Designed	M.A.G.
Drawn	M.A.G.
Reviewed	R.M.R.
Scale	1"=40'
Project No.	2502197
Date	04/01/2026

CAD File: C2502197-00

Title
DEMOLITION PLAN

Sheet No.
C0.00

Xref (s): : XR2502197-00 ; XC2502197-01 ; XC2502197-02

4/1/2026, TRICCITELLI, G:\JOBS25\25\2502197\DWG\C2502197-00.DWG,C0.00 24X36 40SC.

© 2026 BL COMPANIES, INC. THESE DRAWINGS SHALL NOT BE UTILIZED BY ANY PERSON, FIRM OR CORPORATION WITHOUT THE SPECIFIC WRITTEN PERMISSION OF BL COMPANIES.

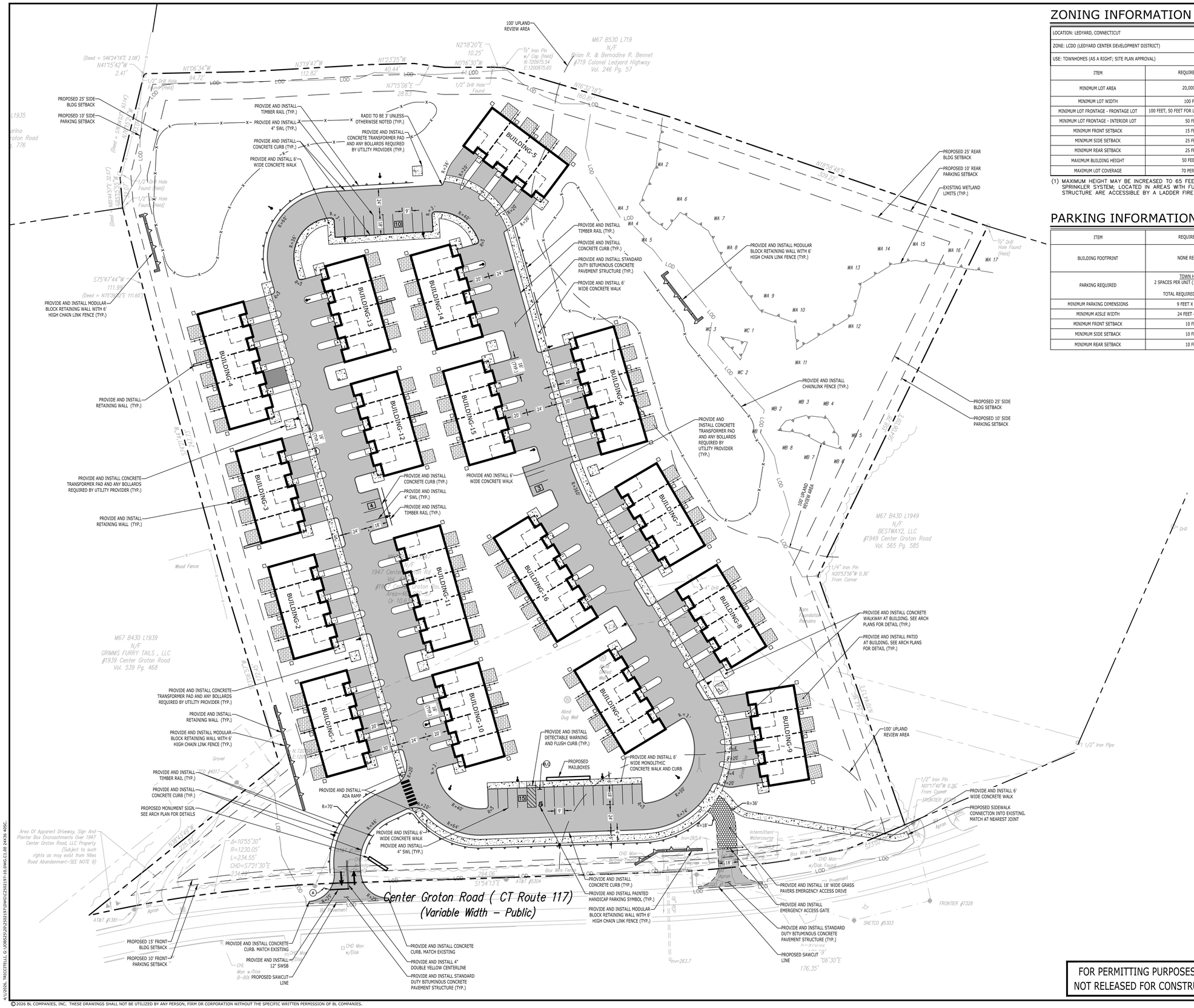

ZONING INFORMATION

LOCATION: LEDYARD, CONNECTICUT

ZONE: LCDD (LEDYARD CENTER DEVELOPMENT DISTRICT)

USE: TOWNHOMES (AS A RIGHT; SITE PLAN APPROVAL)

ITEM	REQUIREMENTS	PROPOSED	VARIANCE
MINIMUM LOT AREA	20,000 S.F.	432,960 S.F. (10.6 AC.)	NO
MINIMUM LOT WIDTH	100 FEET	602.1 FEET	NO
MINIMUM LOT FRONTAGE - FRONTAGE LOT	100 FEET, 50 FEET FOR LOTS ON A CUL-DE-SAC	761.7 FEET	NO
MINIMUM LOT FRONTAGE - INTERIOR LOT	50 FEET	761.7 FEET	NO
MINIMUM FRONT SETBACK	15 FEET	74.5 FEET	NO
MINIMUM SIDE SETBACK	25 FEET	26.5 FEET	NO
MINIMUM REAR SETBACK	25 FEET	25.0 FEET	NO
MAXIMUM BUILDING HEIGHT	50 FEET (1)	<50 FEET	NO
MAXIMUM LOT COVERAGE	70 PERCENT	43 PERCENT	NO

(1) MAXIMUM HEIGHT MAY BE INCREASED TO 65 FEET FOR MULTI–FAMILY AND/OR MIXED–USE BUILDING WITH FULL SPRINKLER SYSTEM; LOCATED IN AREAS WITH FUNCTIONING FIRE HYDRANTS; AND WHERE ALL SIDES OF THE STRUCTURE ARE ACCESSIBLE BY A LADDER FIRE ENGINE.

PARKING INFORMATION

ITEM	REQUIREMENTS	PROPOSED	VARIANCE
BUILDING FOOTPRINT	NONE REQUIRED	(5) 3,751.5 S.F. (8) 3,828.5 S.F. (4) 4,692.5 S.F. TOTAL=68,155.5 S.F.	NO
PARKING REQUIRED	TOWN HOMES: 2 SPACES PER UNIT (72 UNITS X 2 = 144) TOTAL REQUIRED = 144 SPACES	169 SPACES	NO
MINIMUM PARKING DIMENSIONS	9 FEET X 18 FEET	9 FEET X 18 FEET	NO
MINIMUM AISLE WIDTH	24 FEET - 2-WAY	24 FEET - 2-WAY	NO
MINIMUM FRONT SETBACK	10 FEET	64.0 FEET	NO
MINIMUM SIDE SETBACK	10 FEET	141.2 FEET	NO
MINIMUM REAR SETBACK	10 FEET	139.3 FEET	NO

SITE PLAN LEGEND

- PROPERTY LINE
- LIMIT OF DISTURBANCE LINE
- WETLAND LIMITS
- 100' WETLAND UPLAND REVIEW AREA
- SAWCUT LINE
- PROVIDE AND INSTALL TIMBER GUIDERAIL
- PROVIDE AND INSTALL CONCRETE CURB
- PROVIDE AND INSTALL CONCRETE SIDEWALK/CONCRETE PAD
- PROVIDE AND INSTALL CHAIN LINK FENCE
- PROVIDE AND INSTALL STANDARD DUTY BITUMINOUS CONCRETE PAVEMENT STRUCTURE
- PROVIDE AND INSTALL GRASS PAVERS
- PROVIDE AND INSTALL MODULAR BLOCK RETAINING WALL
- PROVIDE AND INSTALL 8' WIDE PAINTED CROSSWALK
- PROPOSED SITE LIGHTING

SIGN LEGEND

SIGN NO.	MUTCD NO.	LEGEND
A	31-0532	STOP 30"
B	31-0629	VAN ACCESSIBLE
C	31-0648	VAN ACCESSIBLE

NOTE: ALL HANDICAP ACCESSIBLE PARKING STALL SIGNAGE TO BE INSTALLED IN PIPE BOLLARDS (SEE DETAIL) AND BE IN FULL COMPLIANCE WITH THE LATEST BUILDING CODE.

WETLAND IMPACTS

WETLAND AREA	31,967 SF (0.73 ACRES)
100' UPLAND REVIEW AREA	131,566 SF (3.02 ACRES)
PROPOSED WETLAND DISTURBANCE	0 SF
PROPOSED UPLAND REVIEW AREA DISTURBANCE	60,481 SF (1.38 ACRES)
PERMANENT UPLAND REVIEW AREA DISTURBANCE (IMPERVIOUS SURFACES)	2,076 SF (0.047 ACRES)

Architecture
Engineering
Environmental
Land Surveying
BL Companies
355 Research Parkway
Meriden, CT 06450
(203) 630-1406

STATE OF CONNECTICUT · RICHARD J. SCHUMACHER · 33260 · LICENSED PROFESSIONAL ENGINEER

PROPOSED MULTI-FAMILY RESIDENTIAL DEVELOPMENT
1947 CENTER GROTON ROAD
LEDYARD, CT 06339

No.	REVISIONS Date	Desc.

Designed	T.A.M.
Drawn	T.A.M.
Reviewed	R.M.R.
Scale	1"=40'
Project No.	2502197
Date	04/01/2026

CAD File: C2502197-10

Title: SITE PLAN

Sheet No. C1.00

Ref (s) : , X:\B2502197\D\WD\C2502197-10.DWG,C1.00 24X36 40SC,

4/1/2026, TRICCITELLI, G:\JOBS\25\20\2502197\D\WD\C2502197-10.DWG,C1.00 24X36 40SC,

© 2026 BL COMPANIES, INC. THESE DRAWINGS SHALL NOT BE UTILIZED BY ANY PERSON, FIRM OR CORPORATION WITHOUT THE SPECIFIC WRITTEN PERMISSION OF BL COMPANIES.

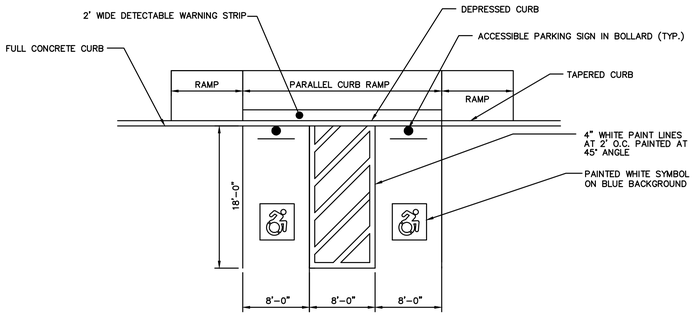

NOTES:
1. SEE SITE PLAN FOR ACCESSIBLE SPACE LOCATIONS.
2. PROVIDE 2 COATS OF PAINT ON ALL SURFACES.

TYPICAL ACCESSIBLE PARKING SPACE AND RAMP DETAIL

N.T.S. BLPC-004

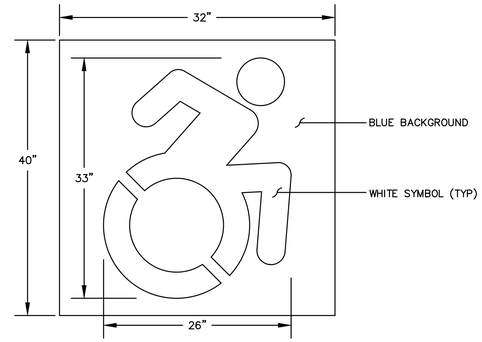

NOTE: HANDICAP SYMBOL TO ADHERE TO STATE BUILDING CODE, LATEST EDITION

CONNECTICUT SYMBOL OF ACCESSIBILITY

N.T.S.

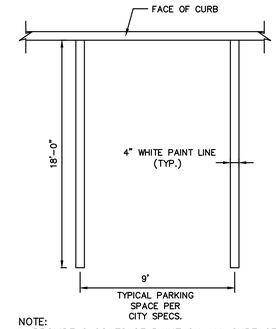

NOTE:
1. PROVIDE 2 COATS OF PAINT ON ALL SURFACES.
2. SEE PLAN FOR ACTUAL SPACE LOCATION AND DIMENSIONS.

TYPICAL PARKING SPACE DETAIL

N.T.S. BLPC-003

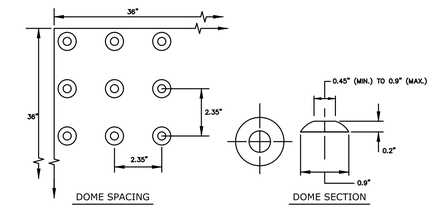

DETECTABLE WARNING

N.T.S.

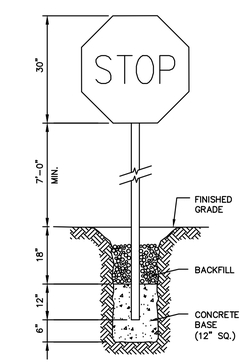

NOTE:
CONSTRUCT SIGN IN ACCORDANCE WITH DOT SPECIFICATIONS.

STOP SIGN

N.T.S. BLSD-002

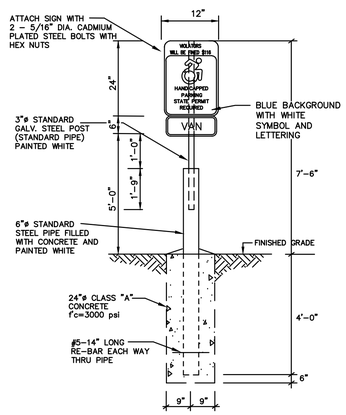

HANDICAP SIGN BOLLARD DETAIL

N.T.S.

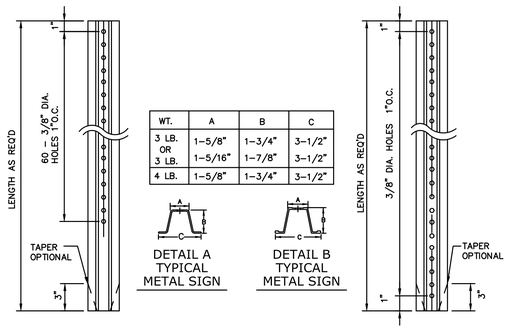

WT.	A	B	C
3 LB. OR 3 LB.	1-5/8"	1-3/4"	3-1/2"
	1-5/16"	1-7/8"	3-1/2"
4 LB.	1-5/8"	1-3/4"	3-1/2"

DETAIL A HOLE LOCATION

DETAIL B HOLE LOCATION

NOTES:
STEEL FOR POSTS SHALL CONFORM TO THE MECHANICAL REQUIREMENTS OF ASTM A 499-81 GRADE 60 AND TO THE CHEMICAL REQUIREMENTS OF ASTM A1-76 CARBON STEEL TEE RAIL HAVING NOMINAL WEIGHT OF "91 LBS OR GREATER PER LINEAR YARD.

AFTER FABRICATION ALL STEEL POSTS SHALL BE GALVANIZED TO MEET THE REQUIREMENTS OF ASTM A-123.

SIGN MOUNTING HEIGHT TO BE APPROVED BY THE ENGINEER.

ALL SIGNS IN STATE ROW TO MEET CTDOT SPECIFICATIONS FOR BREAKAWAY SIGNS. SEE CTDOT STANDARD DETAIL SHEET "TYPICAL METAL SIGN POSTS AND SIGN MOUNTING DETAILS" AND CTDOT FORM 817

TYPICAL METAL SIGN POSTS

N.T.S. BLSD-001

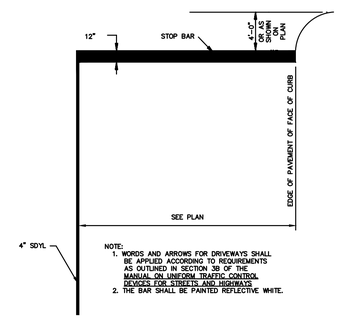

NOTE:
1. WORDS AND ARROWS FOR DRIVEWAYS SHALL BE APPLIED ACCORDING TO REQUIREMENTS AS OUTLINED IN SECTION 3B OF THE MANUAL ON UNIFORM TRAFFIC CONTROL DEVICES FOR STREETS AND HIGHWAYS
2. THE BAR SHALL BE PAINTED REFLECTIVE WHITE.

STOP BAR PAVEMENT MARKING

N.T.S.

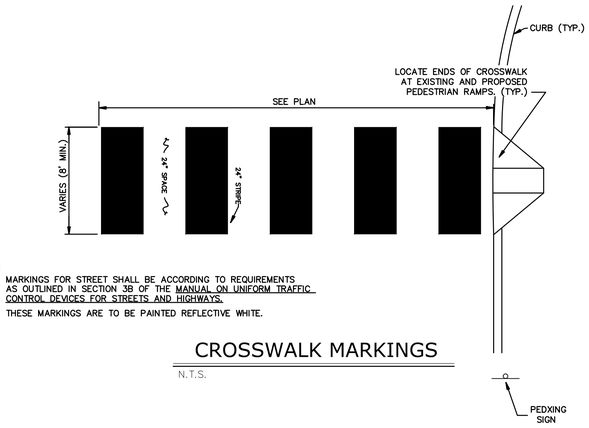

NOTE:
1. MARKINGS FOR STREET SHALL BE ACCORDING TO REQUIREMENTS AS OUTLINED IN SECTION 3B OF THE MANUAL ON UNIFORM TRAFFIC CONTROL DEVICES FOR STREETS AND HIGHWAYS.
2. THESE MARKINGS ARE TO BE PAINTED REFLECTIVE WHITE.

CROSSWALK MARKINGS

N.T.S.

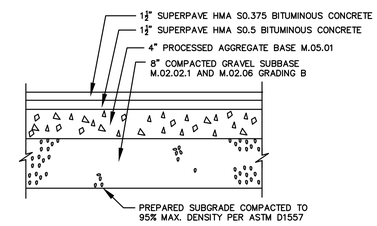

STANDARD DUTY BITUMINOUS CONCRETE PAVEMENT ON SITE

N.T.S. CTPC-006

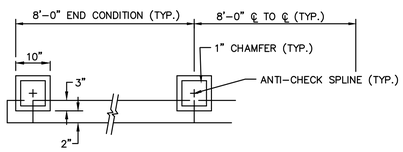

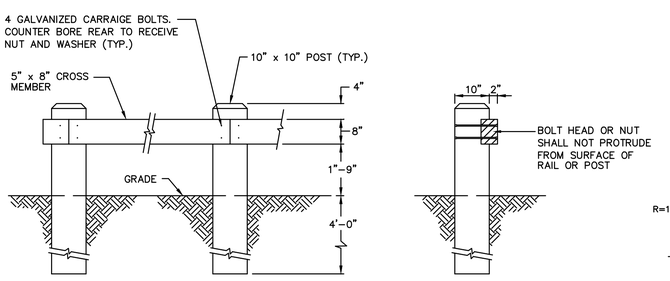

NOTE:
1. ALL TIMBER TO BE PRESSURE TREATED CCA=.40 PCF SOUTHERN YELLOW PINE.

TIMBER RAIL

N.T.S. BLGR-002

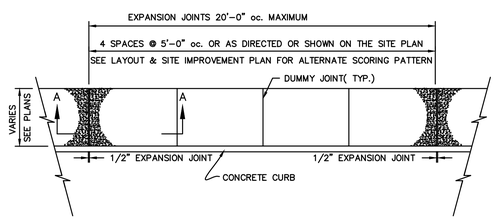

PLAN VIEW

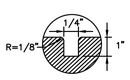

DUMMY JOINT

N.T.S.

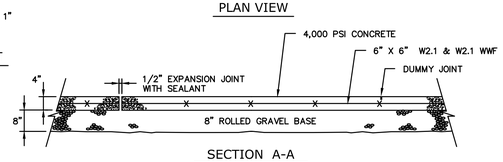

SECTION A-A

CONCRETE SIDEWALK DETAIL

N.T.S. BLSR-001

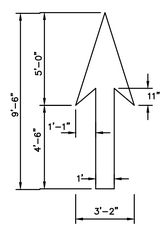

12.5 S.F.

(WHITE)
(ARROWS TO BE CENTERED IN TRAVEL LANE)

PAVEMENT ARROW DETAIL

N.T.S. BLPC-006

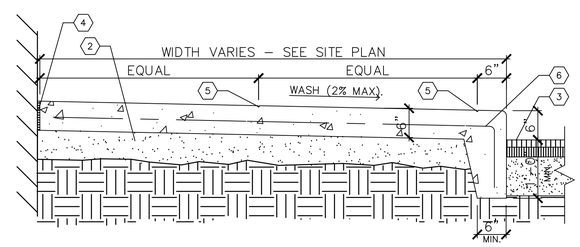

KEYED NOTES

1. N/A
2. 4" COMPACTED AGGREGATE BASE
3. PAVEMENT.
4. COMPRESSIBLE FILLER (3/4" MAXIMUM). CUT BACK AND PROVIDE SEALANT, TYPICAL, AT ALL JOINTS WITH FILLER.
5. 1/4" TOOLED JOINT
6. 6" X 6" #10 W.W.F.

NOTE: EXPANSION JOINT 20' O.C. MAXIMUM. 1/4" TOOL JOINT 4' O.C. OR AS DIRECTED. CONCRETE TO BE 4000 P.S.I.

MONOLITHIC CONCRETE CURB AND SIDEWALK DETAIL

N.T.S. WAG

FOR PERMITTING PURPOSES ONLY
NOT RELEASED FOR CONSTRUCTION

© 2026 BL COMPANIES, INC. THESE DRAWINGS SHALL NOT BE UTILIZED BY ANY PERSON, FIRM OR CORPORATION WITHOUT THE SPECIFIC WRITTEN PERMISSION OF BL COMPANIES.

4/1/2026, TRICCITELLI, G:\JOBS25\2502197\DWG\C2502197-110.DWG,C1.100 24x36,

Architecture
Engineering
Environmental
Land Surveying
BL Companies
355 Research Parkway
Meriden, CT 06450
(203) 630-1406

STATE OF CONNECTICUT
RONALD D. SCHUMANN
33269
LICENSED
PROFESSIONAL ENGINEER

PROPOSED MULTI-FAMILY RESIDENTIAL DEVELOPMENT
1947 CENTER GROTON ROAD
LEDYARD, CT 06339

REVISIONS

No.	Date	Desc.

Designed	M.A.G.
Drawn	M.A.G.
Reviewed	R.M.R.
Scale	NONE
Project No.	2502197
Date	04/01/2026
CAD File:	C2502197-110

Title
SITE DETAILS

Sheet No.
C1.100

Xref (s): , X2502197-00

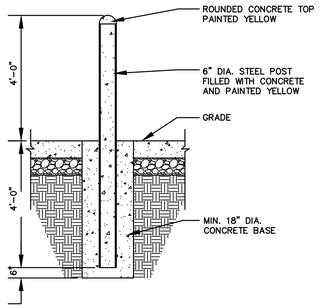

PROTECTIVE POST (BOLLARD) DETAIL

N.T.S. BLSE-005

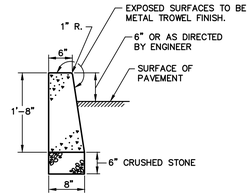

NOTES:
1. CONSTRUCTION JOINTS SHALL BE SPACED APPROXIMATELY EVERY 10 FEET BUT NOT LESS THAN 6 FEET. 1/4" THICK PREFORMED EXPANSION JOINT FILLER SHALL BE INSTALLED EVERY OTHER JOINT.
2. FORMWORK SHALL REMAIN IN PLACE FOR 24 HOURS FOLLOWING CONCRETE POURING.

CONCRETE CURB DETAIL

N.T.S. ZPC-014

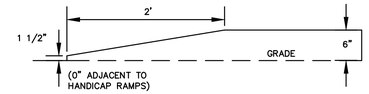

TRANSITION CURB

N.T.S.

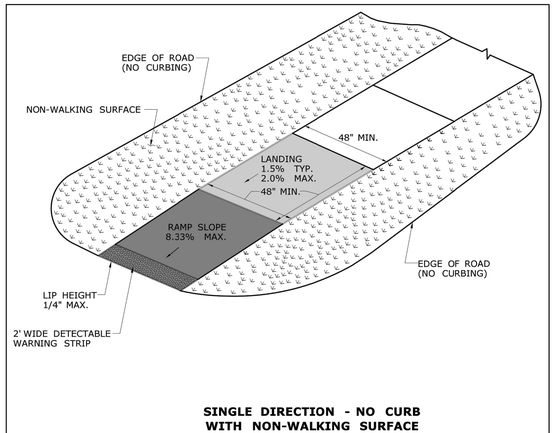

SINGLE DIRECTION - NO CURB WITH NON-WALKING SURFACE (TYPE 17)

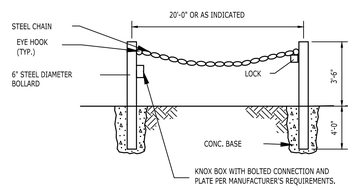

CHAIN GATE DETAIL

N.T.S. BLFD-002

GENERAL NOTES

1. STRIP ALL VEGETATION AND ORGANIC SOIL FROM THE WALL AND GRID ALIGNMENT.
2. BENCH CUT ALL EXCAVATED SLOPES.
3. DO NOT OVER EXCAVATE UNLESS DIRECTED BY SITE SOIL ENGINEER TO REMOVE UNSUITABLE SOIL.
4. SITE SOIL ENGINEER SHALL VERIFY FOUNDATION SOILS AS BEING COMPETENT PER THE DESIGN STANDARDS AND PARAMETERS.
5. LEVELING PAD SHALL CONSIST OF 3/4" FOUNDATION STONE, MINIMUM 6" THICK, MINIMUM 2000 PSI CONCRETE, OR MINIMUM 6" OF 3/4" CRUSHED STONE.
6. MINIMUM EMBEDMENT OF WALL BELOW FINISH GRADE SHALL BE 24".
7. FOLLOW APPLICABLE PROVISIONS OF THE MANUFACTURERS INSTALLATION INSTRUCTIONS AND WRITTEN SPECIFICATIONS.
8. WHERE DRAIN PIPE IS USED, PROVIDE OUTLETS AS SHOWN ON WALL ELEVATIONS.
9. COMPACTION TESTS SHALL BE TAKEN AS THE WALL IS INSTALLED. THE MINIMUM NUMBER OF TESTS SHALL BE DETERMINED BY THE SITE SOILS ENGINEER, OR AS INDICATED IN THE SPECIFICATION.
10. COMPACTION SHALL BE 95% OF MAXIMUM DRY DENSITY PER ASTM D1557.
11. GEOGRID SHALL BE PER BLOCK MANUFACTURER'S DESIGN ON SHOP DRAWINGS.
12. PULL GEOGRID TIGHT PRIOR TO BACK FILLING. LENGTH OF GEOGRID SHALL BE MEASURED FROM FRONT OF SEGMENTAL CONCRETE UNITS.
13. PROVIDE LATERAL DRAINAGE SWALES TO DIRECT FLOWS AROUND THE ENDS OF THE WALL.
14. ESTABLISH TURF AS SOON AS THE WALL IS COMPLETED.
15. FINAL WALL ALIGNMENT SHALL BE LOCATED IN THE FIELD.
16. REINFORCED BACK FILL REQUIREMENTS FOR THE SEGMENTAL CONCRETE RETAINING WALL SHALL CONFORM TO THE FOLLOWING SPECIFICATIONS:

SIEVE SIZE	PERCENT PASSING REINFORCED BACK FILL
5 INCH	100
3-1/2 INCH	90-100
1-1/2 INCH	55-95
1/4 INCH	25-60
NO. 10	15-45
NO. 40	5-25
NO. 100	0-10
NO. 200	0-5

PLASTICITY INDEX (PI) LESS THAN OR EQUAL TO 10 AND A LIQUID LIMIT LESS THAN OR EQUAL TO 40. REINFORCED BACK FILL SHALL BE PLACED AND COMPACTED IN LIFTS NOT EXCEEDING 10 INCHES. REINFORCED BACK FILL SHALL BE COMPACTED TO 95 PERCENT OF THE MAXIMUM DENSITY AS DETERMINED BY ASTM D1557. THE MOISTURE CONTENT OF THE BACK FILL MATERIAL PRIOR TO AND DURING COMPACTION SHALL BE WITHIN 2 PERCENTAGE POINTS OF DRY OPTIMUM.

IF CONDITIONS ARE DIFFERENT THAN THOSE STATED IN THESE DRAWINGS AND SPECIFICATIONS, THE CONTRACTOR MUST CONTACT THE ENGINEER PRIOR TO PROCEEDING WITH THE CONSTRUCTION OF THE WALL.

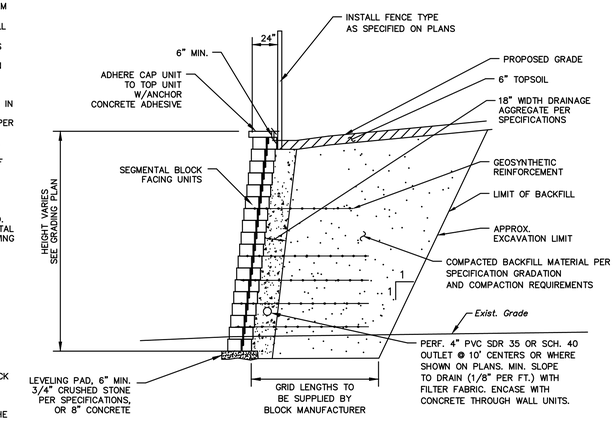

NOTE:
1. BLOCK MANUFACTURER TO SUBMIT SHOP DRAWINGS AND CALCULATIONS FOR RETAINING WALLS PRIOR TO CONSTRUCTION BY CONNECTICUT LICENSED PROFESSIONAL ENGINEER.
2. WALL DRAIN TO BE DISCHARGED PER MANUFACTURER'S RECOMMENDATIONS.

TYPICAL RETAINING WALL SECTION

N.T.S.

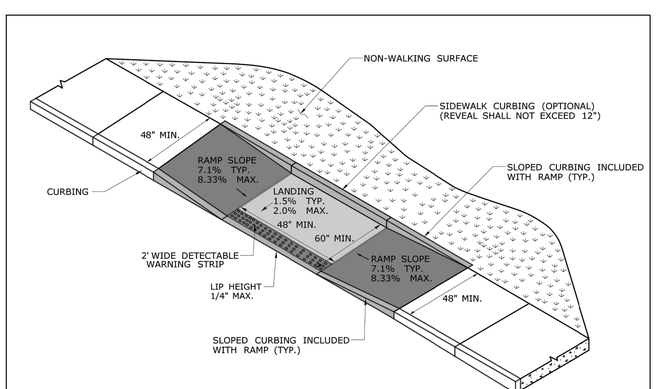

PARALLEL RAMP WITHOUT NON-WALKING SURFACE (TYPE 9)

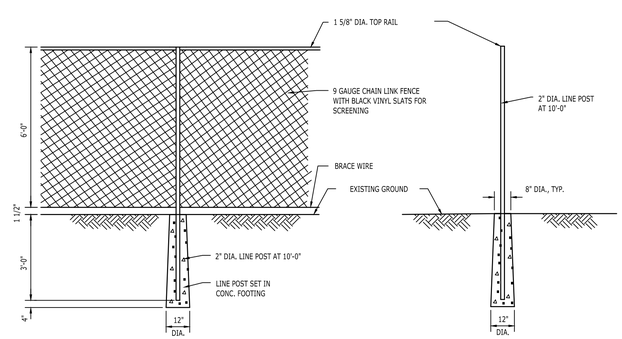

FRONT VIEW

SIDE VIEW

CHAIN LINK FENCE DETAIL

N.T.S. BLFD-001

FOR PERMITTING PURPOSES ONLY
NOT RELEASED FOR CONSTRUCTION

© 2026 BL COMPANIES, INC. THESE DRAWINGS SHALL NOT BE UTILIZED BY ANY PERSON, FIRM OR CORPORATION WITHOUT THE SPECIFIC WRITTEN PERMISSION OF BL COMPANIES.

Architecture
Engineering
Environmental
Land Surveying
BL Companies
355 Research Parkway
Meriden, CT 06450
(203) 630-1406

STATE OF CONNECTICUT
MARK D. SCHUMACHER
33269
LICENSED PROFESSIONAL ENGINEER

PROPOSED MULTI-FAMILY RESIDENTIAL DEVELOPMENT
1947 CENTER GROTON ROAD
LEDYARD, CT 06339

REVISIONS		
No.	Date	Desc.

Designed	M.A.G.
Drawn	M.A.G.
Reviewed	R.M.R.
Scale	NONE
Project No.	2502197
Date	04/01/2026
CAD File: C2502197-110	

Title
SITE DETAILS

Sheet No.
C1.101

04/01/2026, TRACCITELLE, G:\JOBS25\20\2502197\DWG\C2502197-110.DWG-C1.101, 2:6:36,

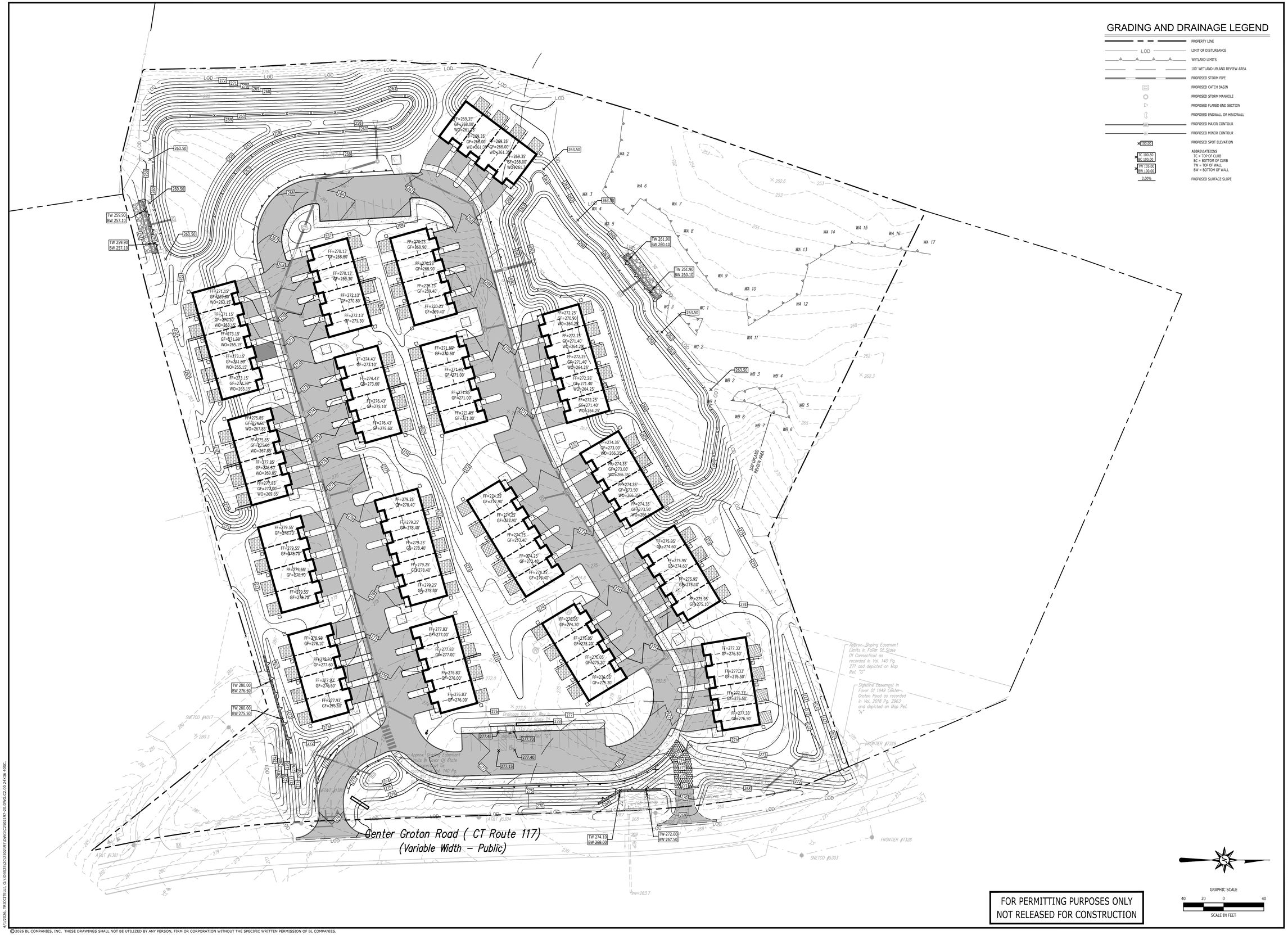

FOR PERMITTING PURPOSES ONLY
NOT RELEASED FOR CONSTRUCTION

Architecture
Engineering
Environmental
Land Surveying
BL Companies
355 Research Parkway
Meriden, CT 06450
(203) 630-1406

STATE OF CONNECTICUT
ANDREW SCHUMACHER
33260
LICENSED
PROFESSIONAL ENGINEER

PROPOSED MULTI-FAMILY RESIDENTIAL DEVELOPMENT
1947 CENTER GROTON ROAD
LEDYARD, CT 06339

REVISIONS

No.	Date	Desc.

Designed	A.S.
Drawn	A.S.
Reviewed	R.M.R.
Scale	1"=40'
Project No.	2502197
Date	04/01/2026

CAD File: C2502197-20

Title
GRADING PLAN

Sheet No.
C2.00

Xref (s) : X8250219701 ; XC2502197-01 ; XC2502197-20 ; XC2502197-25

4/1/2026, TRICCITELLI, G:\JOBS25\2025\2502197\DWG\C2502197-20.DWG C2.00 24X36 40SC.

© 2026 BL COMPANIES, INC. THESE DRAWINGS SHALL NOT BE UTILIZED BY ANY PERSON, FIRM OR CORPORATION WITHOUT THE SPECIFIC WRITTEN PERMISSION OF BL COMPANIES.

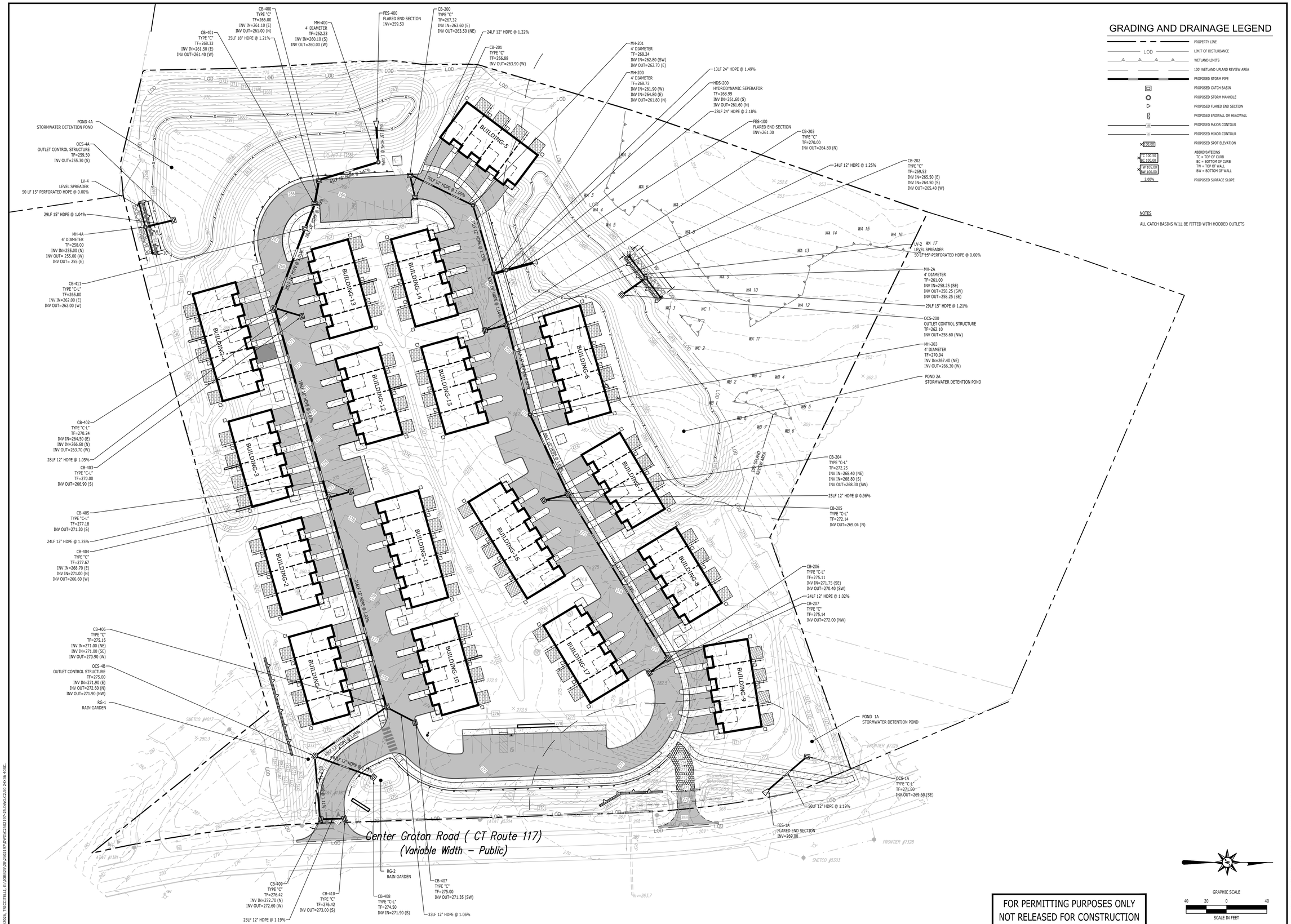

Architecture
Engineering
Environmental
Land Surveying
BL Companies
355 Research Parkway
Meriden, CT 06450
(203) 630-1406

STATE OF CONNECTICUT
RYAN M. SCHUMACHER
33289
LICENSED PROFESSIONAL ENGINEER

PROPOSED MULTI-FAMILY RESIDENTIAL DEVELOPMENT

1947 CENTER GROTON ROAD
LEDYARD, CT 06339

REVISIONS No.	Date	Desc.

Designed	T.R.
Drawn	T.R.
Reviewed	R.M.R.
Scale	1"=40'
Project No.	2502197
Date	04/01/2026

CAD File: C2502197-25

Title
DRAINAGE PLAN

Sheet No.
C2.50

Xref (s): ; XR2502197-00; XY2502197-01; XC2502197-10; XL2502197-20; XC2502197-25

4/1/2026, TRICCITELLI, G:\JOBS2\2\2502197\DWG\C2502197-25.DWG,C2.50 24X36 40SC.

©2026 BL COMPANIES, INC. THESE DRAWINGS SHALL NOT BE UTILIZED BY ANY PERSON, FIRM OR CORPORATION WITHOUT THE SPECIFIC WRITTEN PERMISSION OF BL COMPANIES.

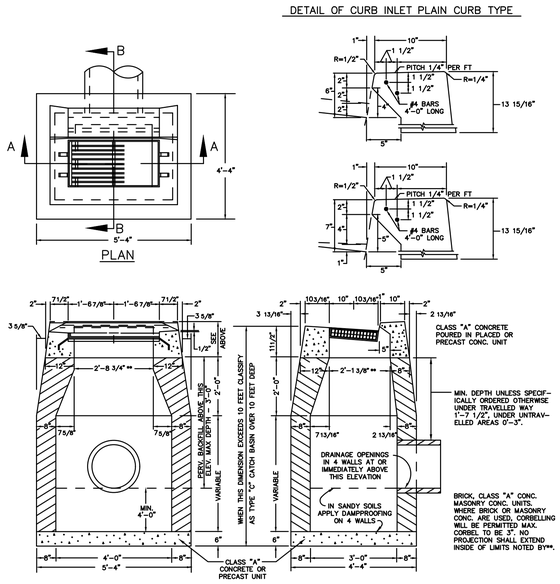

TYPE "C" CATCH BASIN WITH HOOD

N.T.S. ZDD–027

FOR CATCH BASIN AND DROP INLETS WHERE NO CURB OF ANY TYPE EXISTS OR IS PROPOSED.

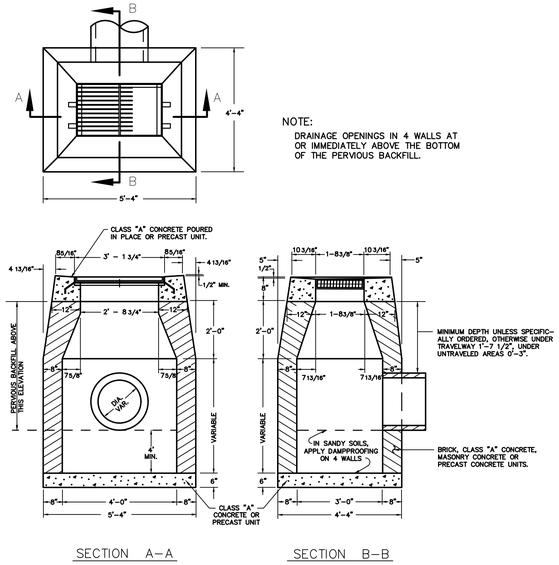

NOTE:
DRAINAGE OPENINGS IN 4 WALLS AT OR IMMEDIATELY ABOVE THE BOTTOM OF THE PERVIOUS BACKFILL.

TYPE "C-L" CATCH BASIN

N.T.S. ZDD–028

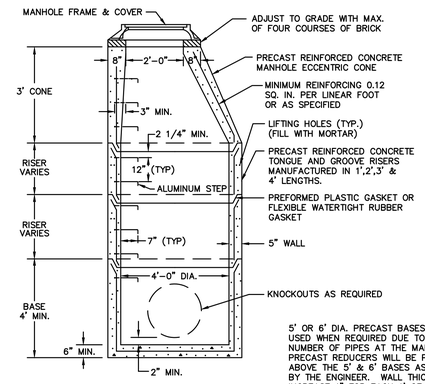

5' OR 6' DIA. PRECAST BASES MAY BE USED WHEN REQUIRED DUE TO SIZE OR NUMBER OF PIPES AT THE MANHOLE. PRECAST REDUCERS WILL BE PLACED ABOVE THE 5' & 6' BASES AS DIRECTED BY THE ENGINEER. WALL THICKNESS TO INCREASE 1" FOR EACH 1' OF INSIDE DIAMETER INCREASE.

PRECAST STORM MANHOLE DETAIL

N.T.S. ZDD–049

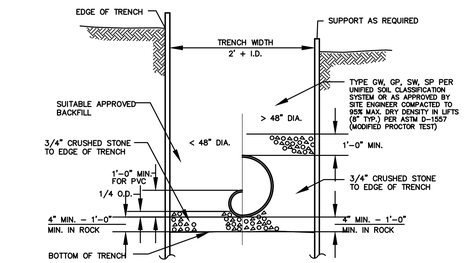

TYPICAL STORM SEWER TRENCH SECTION

N.T.S. BLDD–004

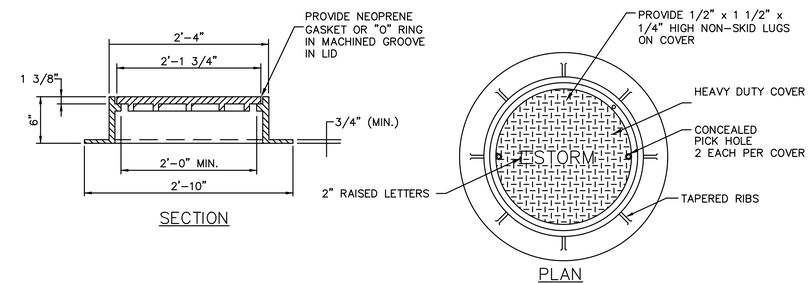

STANDARD MANHOLE FRAME AND COVER

N.T.S. RA_C202_J6

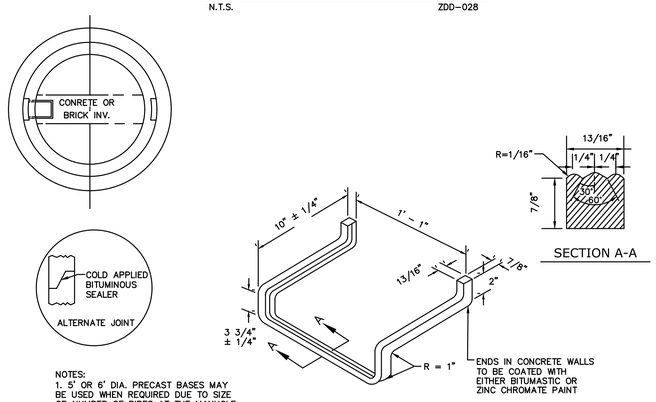

NOTES:
1. 5' OR 6' DIA. PRECAST BASES MAY BE USED WHEN REQUIRED DUE TO SIZE OR NUMBER OF PIPES AT THE MANHOLE. PRECAST REDUCERS WILL BE PLACED ABOVE THE 5' & 6' BASES AS DIRECTED BY THE ENGINEER. WALL THICKNESS TO INCREASE 1" FOR EACH 1' OF INSIDE DIAMETER INCREASE.

2. WHEN INLET SEWER INVERT TO OUTLET SEWER INVERT ELVATION EXCEEDS 24" USE DROP CONNECTION.

NOTE : STEPS TO BE FORGED ALUMINUM

STANDARD MANHOLE STEP

N.T.S. BLSS–005

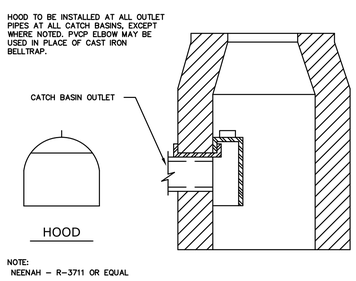

NOTE:
NEENAH – R–3711 OR EQUAL

HOODED OUTLET

N.T.S. CTDD–004

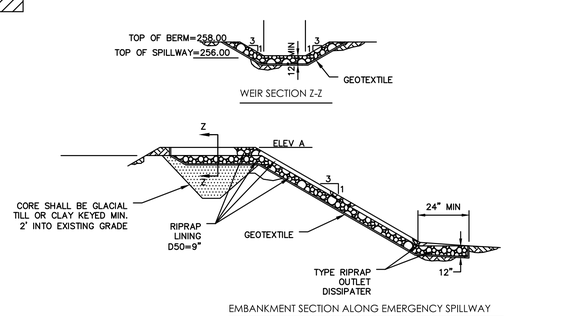

DISPLACED RIPRAP WITHIN THE SPILLWAY AND/OR OUTLET CHANNEL SHALL BE REPLACED IMMEDIATELY.

STORMWATER MANAGEMENT BASIN OUTFLOW AND EMERGENCY SPILLWAY WITH RIPRAP LINING DETAIL

N.T.S

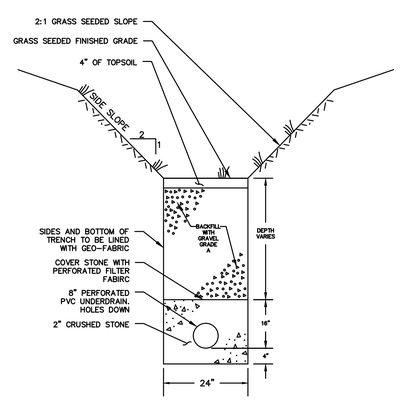

GRASS SWALE DETAIL

N.T.S.

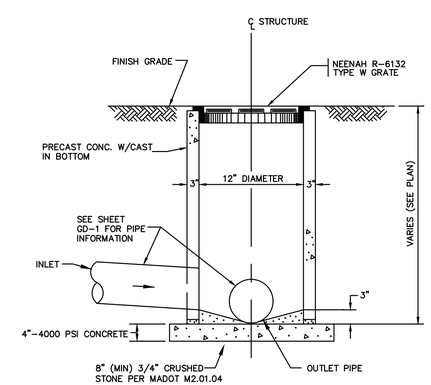

YARD DRAIN DETAIL

N.T.S.

FOR PERMITTING PURPOSES ONLY
NOT RELEASED FOR CONSTRUCTION

Architecture Engineering Environmental Land Surveying
BL Companies
355 Research Parkway
Meriden, CT 06450
(203) 630-1406

STATE OF CONNECTICUT
RICHARD D. SCHUMACHER
33269
LICENSED PROFESSIONAL ENGINEER

PROPOSED MULTI-FAMILY RESIDENTIAL DEVELOPMENT
1947 CENTER GROTON ROAD
LEDYARD, CT 06339

No.	Date	REVISIONS Desc.

Designed	T.R.
Drawn	T.R.
Reviewed	R.M.R.
Scale	NONE
Project No.	2502197
Date	04/01/2026
CAD File: C2502197-110	

Title
GRADING AND DRAINAGE DETAILS

Sheet No.
C2.100

Xref (s) : XR2502197-00

4/1/2026, TRICCITELLI, G:\JOBS2$\2502197\DWG\C2502197-110.DWG,C2.100 24x36,
© 2026 BL COMPANIES, INC. THESE DRAWINGS SHALL NOT BE UTILIZED BY ANY PERSON, FIRM OR CORPORATION WITHOUT THE SPECIFIC WRITTEN PERMISSION OF BL COMPANIES.

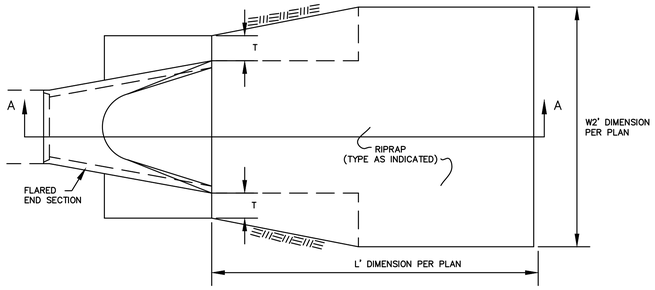

PLAN

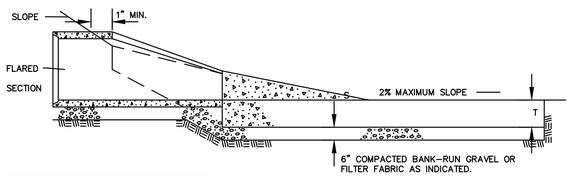

RIPRAP TYPE	"T" (INCHES)
INTERMEDIATE	18
MODIFIED	12

SECTION A-A

RIPRAP AT FLARED SECTION

N.T.S. CTDD-010

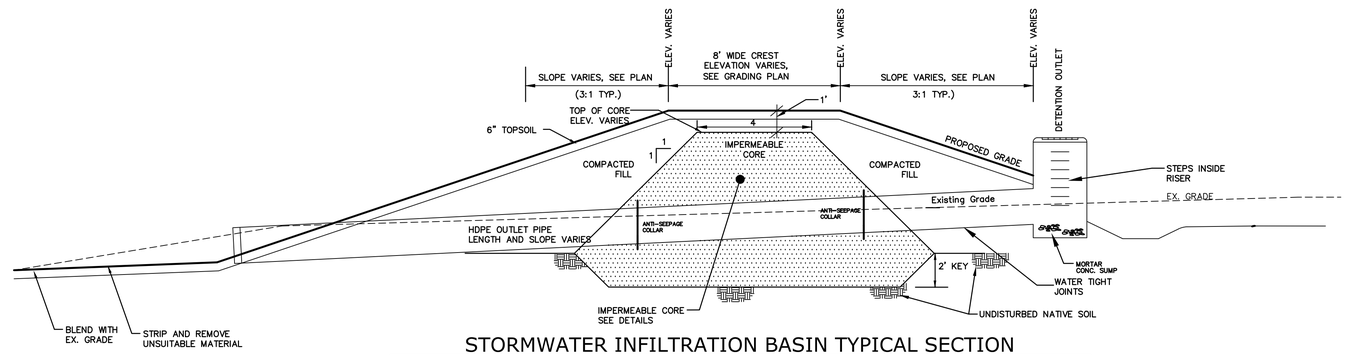

STORMWATER INFILTRATION BASIN TYPICAL SECTION

SCALE: 1"=5' HORIZ. AND VERT.

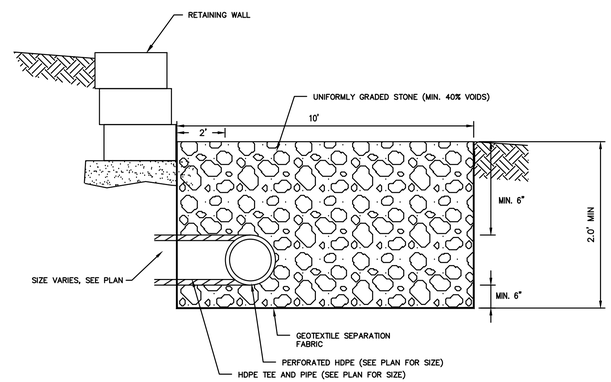

LEVEL SPREADER DETAIL

N.T.S.

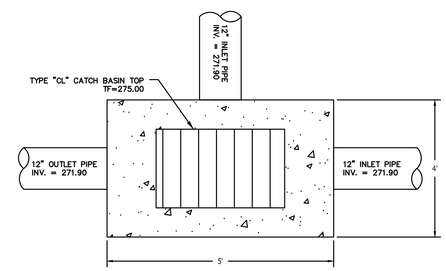

PLAN VIEW

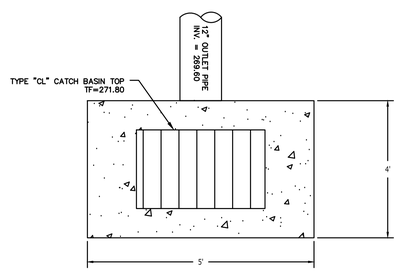

PLAN VIEW

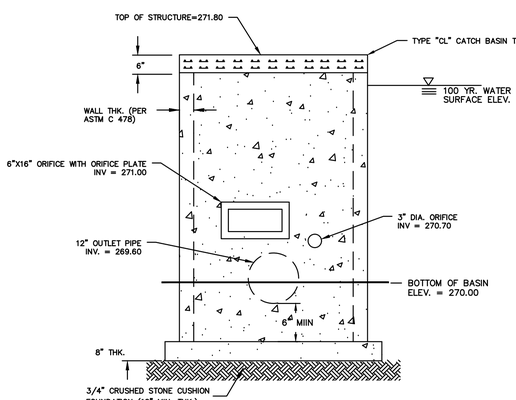

FRONT VIEW

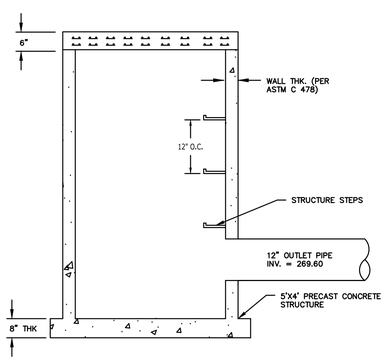

SIDE SECTION VIEW

NOTES:

1. WEIR PLATE SHALL BE 3/8" ALUMINUM PLATE, PAINTED BLACK. PLATE TO HAVE 1"x3" ELONGATED HOLES FOR MOUNTING
2. MOUNT WEIR PLATE TO OUTLET WITH 3/4" STAINLESS STEEL BOLTS AND WASHERS. ADJUST WEIR TO FINAL ELEVATIONS.
3. SUBMIT SHOP DRAWINGS OF OUTLET STRUCTURE TO OWNER FOR REVIEW & APPROVAL PRIOR TO CONSTRUCTION.

OUTLET CONTROL STRUCTURE - POND 1A

N.T.S.

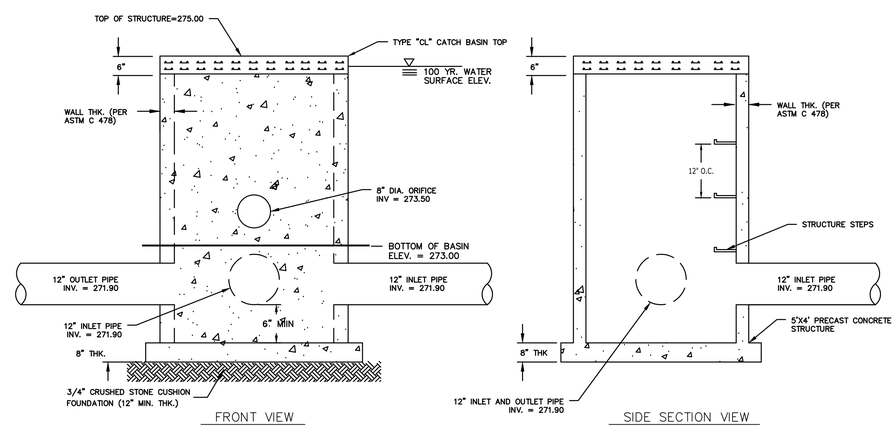

FRONT VIEW

SIDE SECTION VIEW

NOTES:

1. WEIR PLATE SHALL BE 3/8" ALUMINUM PLATE, PAINTED BLACK. PLATE TO HAVE 1"x3" ELONGATED HOLES FOR MOUNTING
2. MOUNT WEIR PLATE TO OUTLET WITH 3/4" STAINLESS STEEL BOLTS AND WASHERS. ADJUST WEIR TO FINAL ELEVATIONS.
3. SUBMIT SHOP DRAWINGS OF OUTLET STRUCTURE TO OWNER FOR REVIEW & APPROVAL PRIOR TO CONSTRUCTION.

OUTLET CONTROL STRUCTURE - RG-1

N.T.S.

FOR PERMITTING PURPOSES ONLY
NOT RELEASED FOR CONSTRUCTION

Architecture
Engineering
Environmental
Land Surveying
BL Companies
355 Research Parkway
Meriden, CT 06450
(203) 630-1406

STATE OF CONNECTICUT
RONALD SCHUMACHER
33269
LICENSED
PROFESSIONAL ENGINEER

PROPOSED MULTI-FAMILY RESIDENTIAL DEVELOPMENT
1947 CENTER GROTON ROAD
LEDYARD, CT 06339

REVISIONS No.	Date	Desc.

Designed	T.R.
Drawn	T.R.
Reviewed	R.M.R.
Scale	NONE
Project No.	2502197
Date	04/01/2026

CAD File: C2502197-110

Title
GRADING AND DRAINAGE DETAILS

Sheet No.
C2.101

Xref (s): : 2502197-00

4/1/2026, TRICCITELLI, G:\JOBS25\2502197\DWG\C2502197-110.DWG-C2.101, 24X36,

© 2026 BL COMPANIES, INC. THESE DRAWINGS SHALL NOT BE UTILIZED BY ANY PERSON, FIRM OR CORPORATION WITHOUT THE SPECIFIC WRITTEN PERMISSION OF BL COMPANIES.

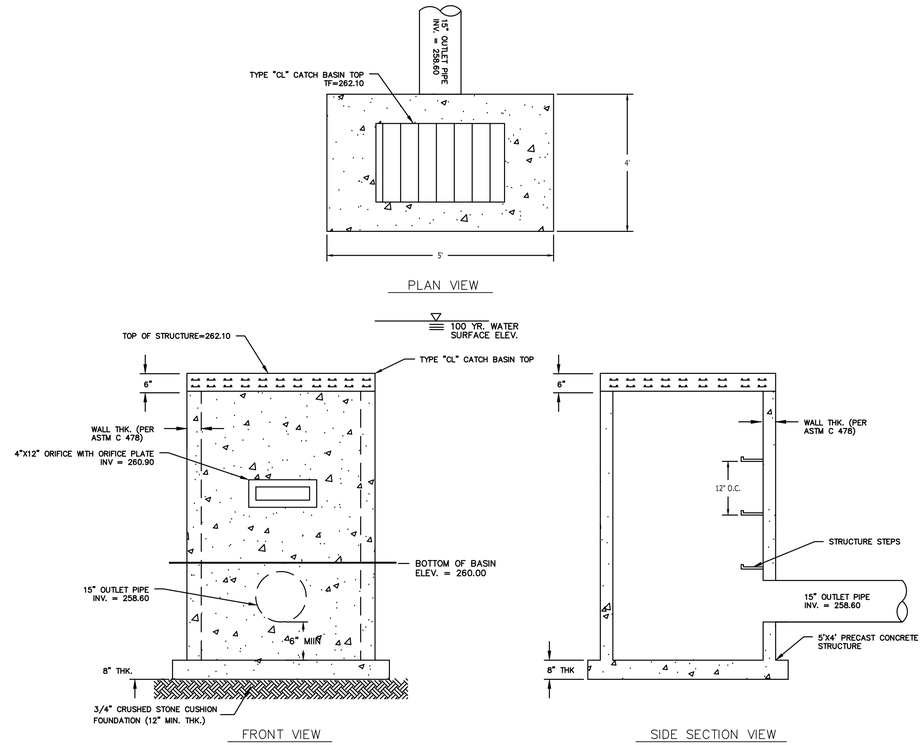

NOTES:

1. WEIR PLATE SHALL BE 3/8" ALUMINUM PLATE, PAINTED BLACK. PLATE TO HAVE 1"x3" ELONGATED HOLES FOR MOUNTING
2. MOUNT WEIR PLATE TO OUTLET WITH 3/4" STAINLESS STEEL BOLTS AND WASHERS. ADJUST WEIR TO FINAL ELEVATIONS.
3. SUBMIT SHOP DRAWINGS OF OUTLET STRUCTURE TO OWNER FOR REVIEW & APPROVAL PRIOR TO CONSTRUCTION.

OUTLET CONTROL STRUCTURE - POND 2A

N.T.S.

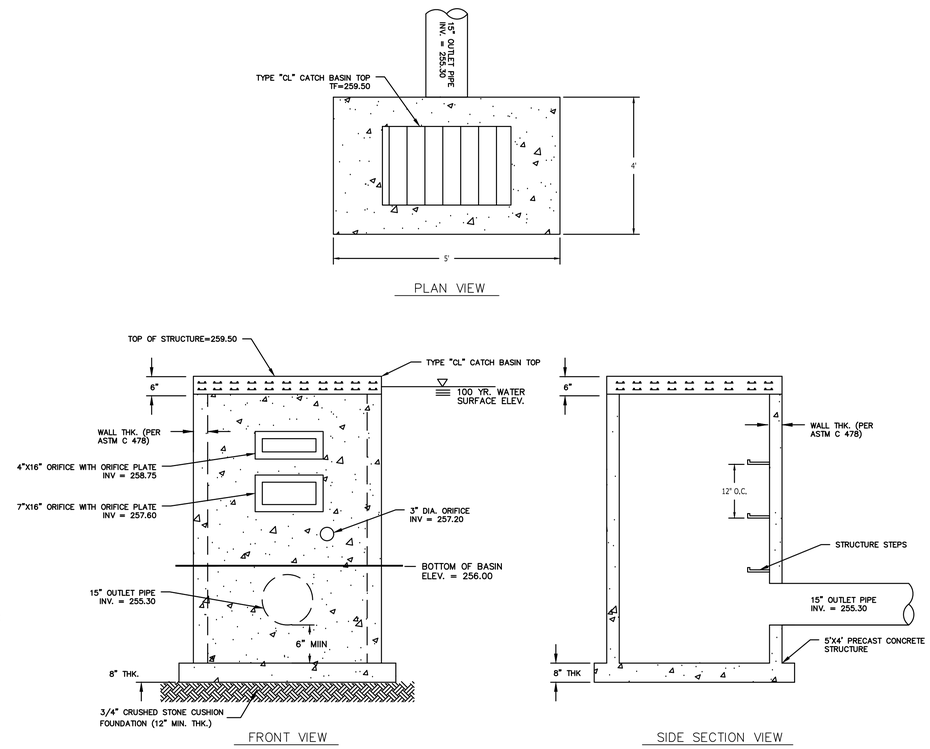

NOTES:

1. WEIR PLATE SHALL BE 3/8" ALUMINUM PLATE, PAINTED BLACK. PLATE TO HAVE 1"x3" ELONGATED HOLES FOR MOUNTING
2. MOUNT WEIR PLATE TO OUTLET WITH 3/4" STAINLESS STEEL BOLTS AND WASHERS. ADJUST WEIR TO FINAL ELEVATIONS.
3. SUBMIT SHOP DRAWINGS OF OUTLET STRUCTURE TO OWNER FOR REVIEW & APPROVAL PRIOR TO CONSTRUCTION.

OUTLET CONTROL STRUCTURE - POND 4A

N.T.S.

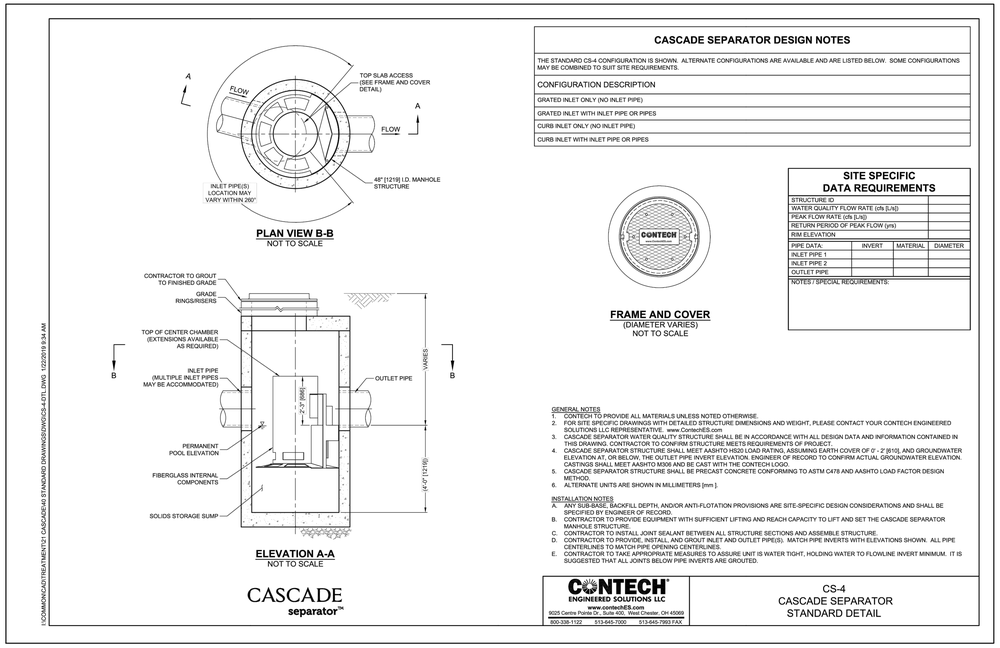

CASCADE SEPARATOR DESIGN NOTES

THE STANDARD CS-4 CONFIGURATION IS SHOWN. ALTERNATE CONFIGURATIONS ARE AVAILABLE AND ARE LISTED BELOW. SOME CONFIGURATIONS MAY BE COMBINED TO SUIT SITE REQUIREMENTS.

CONFIGURATION DESCRIPTION
GRATED INLET ONLY (NO INLET PIPE)
GRATED INLET WITH INLET PIPE OR PIPES
CURB INLET ONLY (NO INLET PIPE)
CURB INLET WITH INLET PIPE OR PIPES

SITE SPECIFIC DATA REQUIREMENTS

STRUCTURE ID			
WATER QUALITY FLOW RATE (cfs [L/s])			
PEAK FLOW RATE (cfs [L/s])			
RETURN PERIOD OF PEAK FLOW (yrs)			
RIM ELEVATION			
PIPE DATA:	INVERT	MATERIAL	DIAMETER
INLET PIPE 1			
INLET PIPE 2			
OUTLET PIPE			
NOTES / SPECIAL REQUIREMENTS:			

GENERAL NOTES

1. CONTECH TO PROVIDE ALL MATERIALS UNLESS NOTED OTHERWISE.
2. FOR SITE SPECIFIC DRAWINGS WITH DETAILED STRUCTURE DIMENSIONS AND WEIGHT, PLEASE CONTACT YOUR CONTECH ENGINEERED SOLUTIONS LLC REPRESENTATIVE. www.ContechES.com
3. CASCADE SEPARATOR WATER QUALITY STRUCTURE SHALL BE IN ACCORDANCE WITH ALL DESIGN DATA AND INFORMATION CONTAINED IN THIS DRAWING. CONTRACTOR TO CONFIRM STRUCTURE MEETS REQUIREMENTS OF PROJECT.
4. CASCADE SEPARATOR STRUCTURE SHALL MEET AASHTO HS20 LOAD RATING, ASSUMING EARTH COVER OF 0' - 2' [610], AND GROUNDWATER ELEVATION AT, OR BELOW, THE OUTLET PIPE INVERT ELEVATION. ENGINEER OF RECORD TO CONFIRM ACTUAL GROUNDWATER ELEVATION. CASTINGS SHALL MEET AASHTO M306 AND BE CAST WITH THE CONTECH LOGO.
5. CASCADE SEPARATOR STRUCTURE SHALL BE PRECAST CONCRETE CONFORMING TO ASTM C478 AND AASHTO LOAD FACTOR DESIGN METHOD.
6. ALTERNATE UNITS ARE SHOWN IN MILLIMETERS [mm].

INSTALLATION NOTES

A. ANY SUB-BASE, BACKFILL DEPTH, AND/OR ANTI-FLOTATION PROVISIONS ARE SITE-SPECIFIC DESIGN CONSIDERATIONS AND SHALL BE SPECIFIED BY ENGINEER OF RECORD.
B. CONTRACTOR TO PROVIDE EQUIPMENT WITH SUFFICIENT LIFTING AND REACH CAPACITY TO LIFT AND SET THE CASCADE SEPARATOR MANHOLE STRUCTURE.
C. CONTRACTOR TO INSTALL JOINT SEALANT BETWEEN ALL STRUCTURE SECTIONS AND ASSEMBLE STRUCTURE.
D. CONTRACTOR TO PROVIDE, INSTALL, AND GROUT INLET AND OUTLET PIPE(S). MATCH PIPE INVERTS WITH ELEVATIONS SHOWN. ALL PIPE CENTERLINES TO MATCH PIPE OPENING CENTERLINES.
E. CONTRACTOR TO TAKE APPROPRIATE MEASURES TO ASSURE UNIT IS WATER TIGHT, HOLDING WATER TO FLOWLINE INVERT MINIMUM. IT IS SUGGESTED THAT ALL JOINTS BELOW PIPE INVERTS ARE GROUTED.

I:\COMMON\CADSTD\EATMENT\1 CASCADE\HS STANDARD DRAWINGS\DWG\CS-4.DTL DWG 12/2/2019 9:34 AM

HYDRODYNAMIC SEPERATOR - HDS-200

N.T.S.

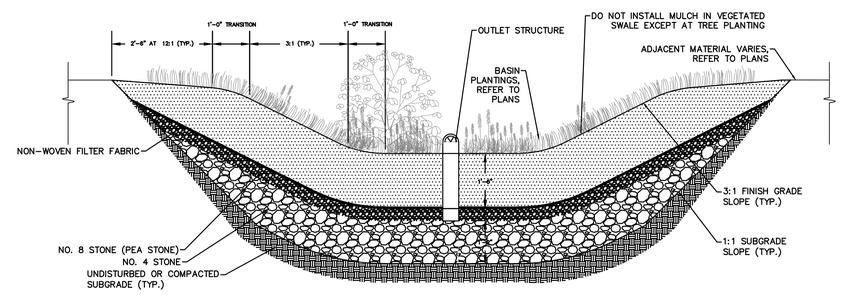

RAIN GARDEN BASIN (TYP.)
N.T.S.

FOR PERMITTING PURPOSES ONLY
NOT RELEASED FOR CONSTRUCTION

4/1/2026, TRACETELLI, G:\WORKS\3\2025\2502197\DWG\C2502197-110.DWG, C2.102, R.D.R., 24X36,

©2026 BL COMPANIES, INC. THESE DRAWINGS SHALL NOT BE UTILIZED BY ANY PERSON, FIRM OR CORPORATION WITHOUT THE SPECIFIC WRITTEN PERMISSION OF BL COMPANIES.

Architecture
Engineering
Environmental
Land Surveying
BL Companies
355 Research Parkway
Meriden, CT 06450
(203) 630-1406

STATE OF CONNECTICUT
RON D. SCHUMACHER
33260
LICENSED
PROFESSIONAL ENGINEER

PROPOSED MULTI-FAMILY RESIDENTIAL DEVELOPMENT
1947 CENTER GROTON ROAD
LEDYARD, CT 06339

REVISIONS

No.	Date	Desc.

Designed	T.R.
Drawn	T.R.
Reviewed	R.M.R.
Scale	NONE
Project No.	2502197
Date	04/01/2026

CAD File: C2502197-110

Title
GRADING AND DRAINAGE DETAILS

Sheet No.
C2.102

Xref (s) : XB2502197-00

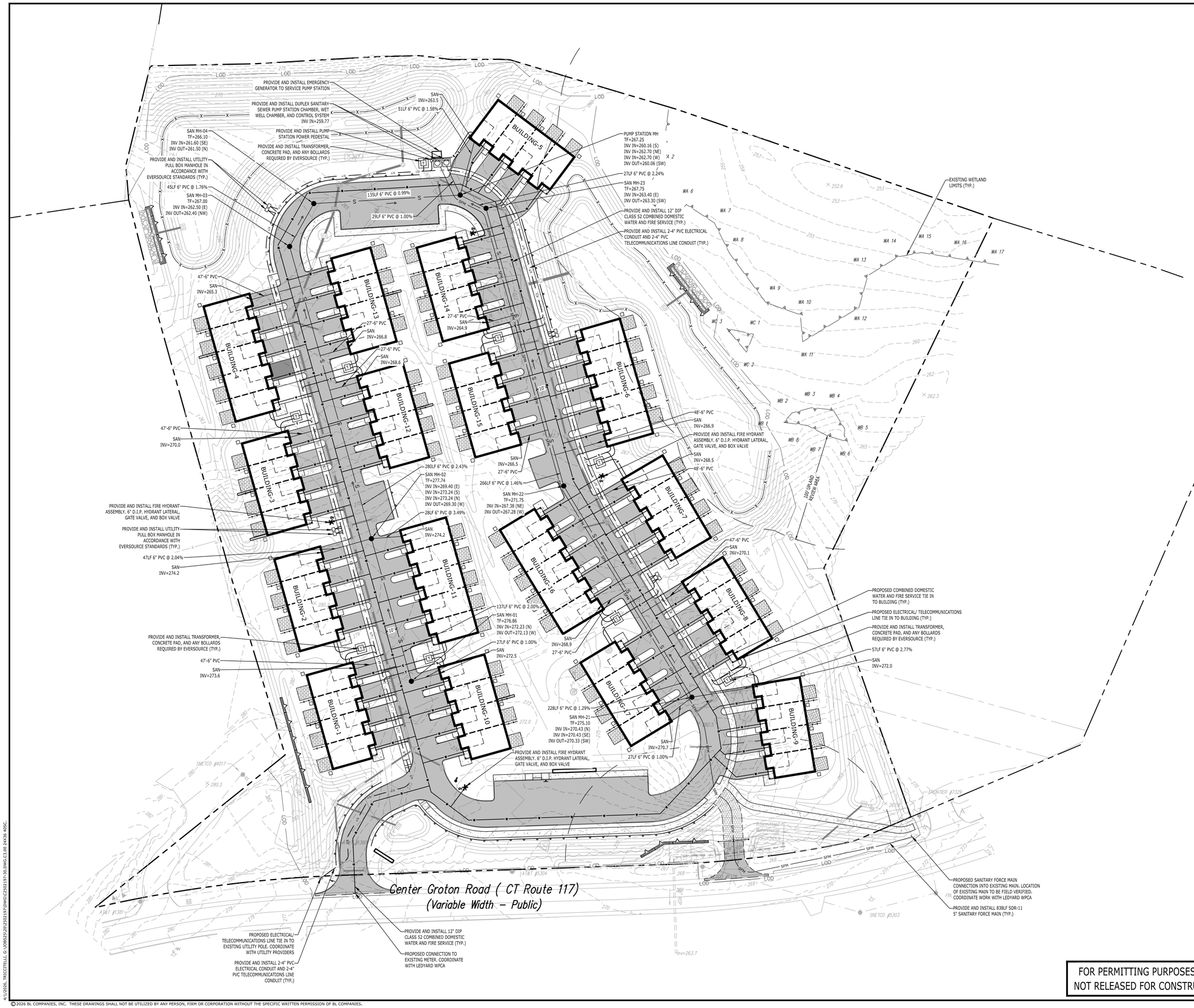

FOR PERMITTING PURPOSES ONLY
NOT RELEASED FOR CONSTRUCTION

SITE UTILITIES LEGEND

PROPERTY LINE	
LIMIT OF DISTURBANCE LINE	LOD
ELECTRIC LINE	E
ELECTRIC/TELECOMMUNICATIONS LINE	E/T
GAS LINE	G
WATER LINE	W
SANITARY SEWER LINE	S
SANITARY SEWER FORCE MAIN	SFM
OVERHEAD LINE	OH
TRANSFORMER / SWITCHGEAR	T S
HYDRANT	
UTILITY POLE	
SANITARY MANHOLE	
SANITARY CLEANOUT	CO
WATER VALVE	WV
GATE VALVE	GV
THRUST BLOCK	
GREASE TRAP	
OUTLET CONTROL STRUCTURE	
HYDRODYNAMIC SEPARATOR	
STORM PIPE	
CATCH BASIN	
STORM MANHOLE	
FLARED END	
END WALL OR HEADWALL	
PROPOSED CONTOUR LINE	228
PROPOSED SPOT GRADE	x 100.00
ABBREVIATIONS: -TC=TOP OF CURB -BC=BOTTOM OF CURB -TW=TOP OF WALL -BW=BOTTOM OF WALL	x TC=100.00 BC=99.50 x TW=108.00 BW=100.00
PROPOSED SURFACE SLOPE	2%

Architecture
Engineering
Environmental
Land Surveying
BL Companies
355 Research Parkway
Meriden, CT 06450
(203) 630-1406

STATE OF CONNECTICUT
RONALD R. SCHUMACHER
33269
LICENSED
PROFESSIONAL ENGINEER

PROPOSED MULTI-FAMILY RESIDENTIAL DEVELOPMENT
1947 CENTER GROTON ROAD
LEDYARD, CT 06339

REVISIONS

No.	Date	Desc.

Designed	M.A.G.
Drawn	M.A.G.
Reviewed	R.M.R.
Scale	1"=40'
Project No.	2502197
Date	04/01/2026

CAD File: C2502197-30

Title

SITE UTILITIES PLAN

Sheet No.

C3.00

4/1/2026, TRISCITELLI, G:\JOBS25\2502197\DWG\C2502197-30.DWG,C3.00 24X36 40SC.

XREF(S): , XREF\C2502197-00, XREF\C2502197-01, XREF\C2502197-02, XREF\C2502197-30, XREF\C2502197-25

© 2026 BL COMPANIES, INC. THESE DRAWINGS SHALL NOT BE UTILIZED BY ANY PERSON, FIRM OR CORPORATION WITHOUT THE SPECIFIC WRITTEN PERMISSION OF BL COMPANIES.

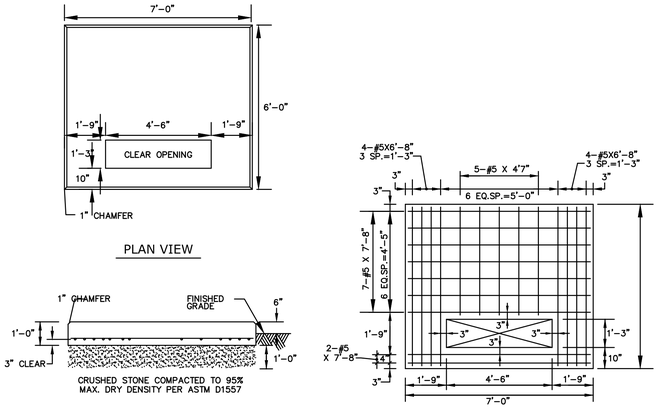

CONFIRM SIZE WITH ELECTRIC COMPANY PRIOR TO CONSTRUCTION

TRANSFORMER PAD

N.T.S. BLLE-001

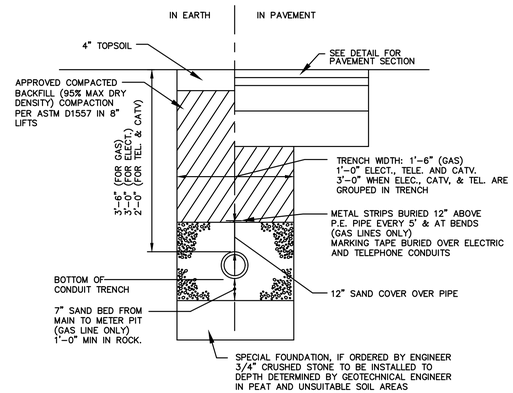

ELECTRICAL, TELEPHONE AND GAS TRENCH DETAIL

N.T.S. BLUD-001

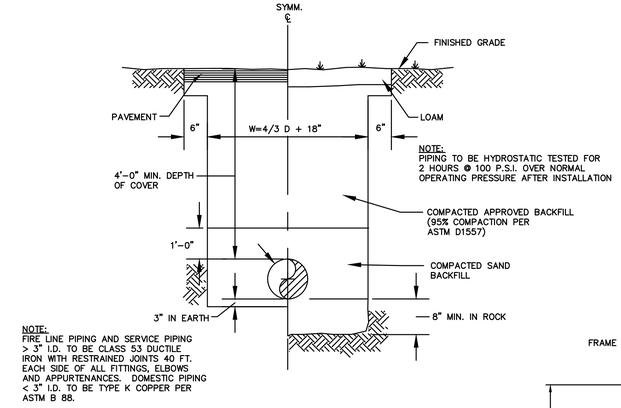

NOTE:
PIPING TO BE HYDROSTATIC TESTED FOR 2 HOURS @ 100 P.S.I. OVER NORMAL OPERATING PRESSURE AFTER INSTALLATION

NOTE:
FIRE LINE PIPING AND SERVICE PIPING > 3" I.D. TO BE CLASS 53 DUCTILE IRON WITH RESTRAINED JOINTS 40 FT. EACH SIDE OF ALL FITTINGS, ELBOWS AND APPURTENANCES. DOMESTIC PIPING < 3" I.D. TO BE TYPE K COPPER PER ASTM B 88.

TYPICAL WATER MAIN AND SERVICE TRENCH DETAIL

N.T.S. BLWD-005

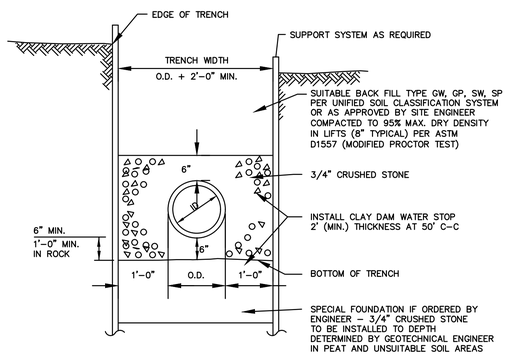

TYPICAL SANITARY SEWER TRENCH SECTION

N.T.S BLSS-010

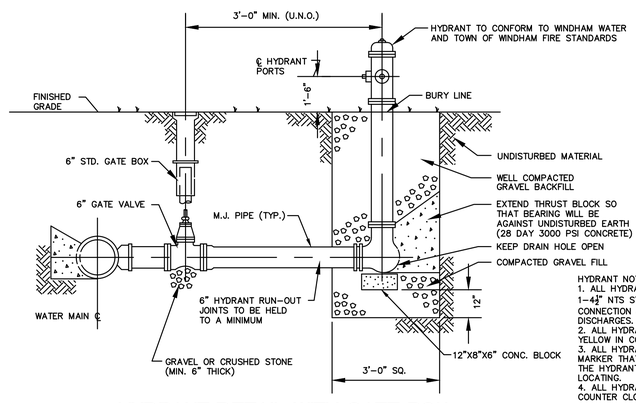

HYDRANT NOTES:
1. ALL HYDRANTS SHALL HAVE 1-4½" NTS STEAMER CONNECTION AND 2-2½" NTS DISCHARGES.
2. ALL HYDRANTS SHALL BE YELLOW IN COLOR.
3. ALL HYDRANTS SHALL HAVE MARKER THAT EXTENDS ABOVE THE HYDRANT FOR WINTER LOCATING.
4. ALL HYDRANTS TO OPEN COUNTER CLOCKWISE.

HYDRANT DETAIL WITH GATE BOX

N.T.S. BLWD-003

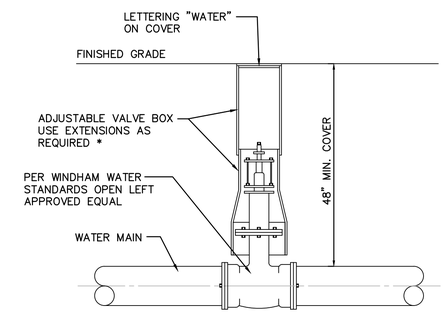

* NOTE: IF EXTENSIONS ARE NECESSARY CONTRACTOR SHALL SET "PLUMB" AND ALIGN PROPERLY FOR ACCESS TO OPERATING NUT.

TYPICAL GATE VALVE AND VALVE BOX DETAIL

N.T.S. BLWD-002

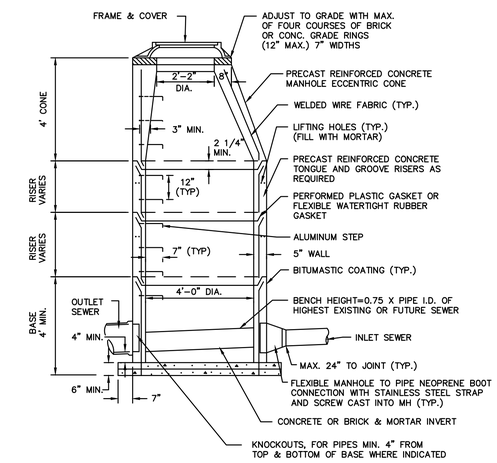

PRECAST SANITARY MANHOLE

N.T.S. BLSS-001

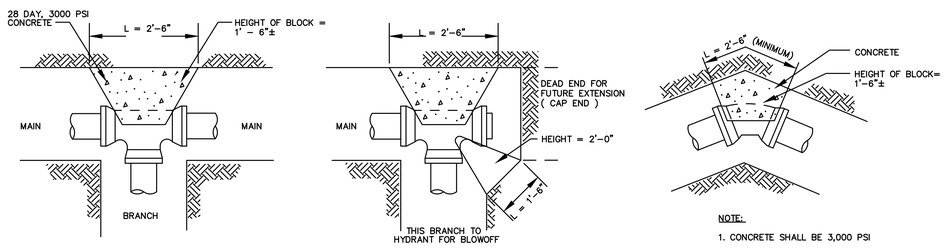

NOTE:
1. CONCRETE SHALL BE 3,000 PSI

THRUST BLOCKS FOR WATER LINES

N.T.S. BLWD-001

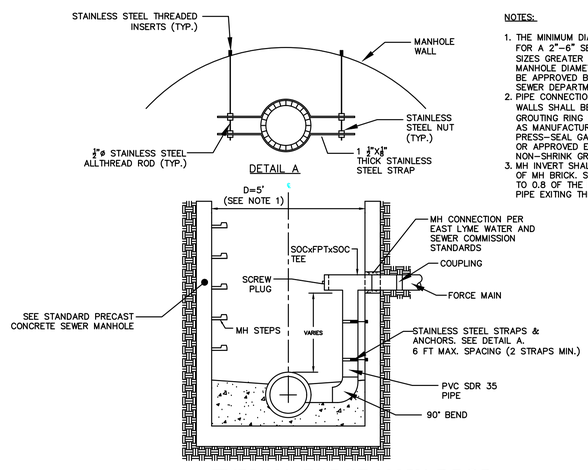

NOTES:
1. THE MINIMUM DIAMETER WILL BE 5' FOR A 2"-6" SEWER. FOR PIPE SIZES GREATER THAN 6", THE MANHOLE DIAMETER WILL NEED TO BE APPROVED BY EAST LYME SEWER DEPARTMENT ENGINEER.
2. PIPE CONNECTIONS THROUGH MH WALLS SHALL BE MADE W/ GROUTING RING (WS WATERSTOP) AS MANUFACTURED BY PRESS-SEAL GASKET CORPORATION OR APPROVED EQUAL AND NON-SHRINK GROUT.
3. MH INVERT SHALL BE FORMED OUT OF MH BRICK. SHELF TO BE BUILT TO 0.8 OF THE DIAMETER THE OF PIPE EXITING THE MH.

TYPICAL FORCE MAIN DROP CONNECTION TO MANHOLE

N.T.S. SD523-13

FOR PERMITTING PURPOSES ONLY
NOT RELEASED FOR CONSTRUCTION

Architecture
Engineering
Environmental
Land Surveying
BL Companies
355 Research Parkway
Meriden, CT 06450
(203) 630-1406

STATE OF CONNECTICUT
RONALD SCHUMACHER
33260
LICENSED
PROFESSIONAL ENGINEER

PROPOSED MULTI-FAMILY RESIDENTIAL DEVELOPMENT
1947 CENTER GROTON ROAD
LEDYARD, CT 06339

REVISIONS		
No.	Date	Desc.

Designed	M.A.G.
Drawn	M.A.G.
Reviewed	R.M.R.
Scale	NONE
Project No.	2502197
Date	04/01/2026

CAD File: C2502197-110

Title
SITE UTILITIES DETAILS

Sheet No.
C3.100

Xref (s) : 1-X2502197-00

4/1/2026, TRACETELLI, G:\JOBS25\00\02197\DWG\C2502197-110.DWG-C3.100-24X36.
© 2026 BL COMPANIES, INC. THESE DRAWINGS SHALL NOT BE UTILIZED BY ANY PERSON, FIRM OR CORPORATION WITHOUT THE SPECIFIC WRITTEN PERMISSION OF BL COMPANIES.

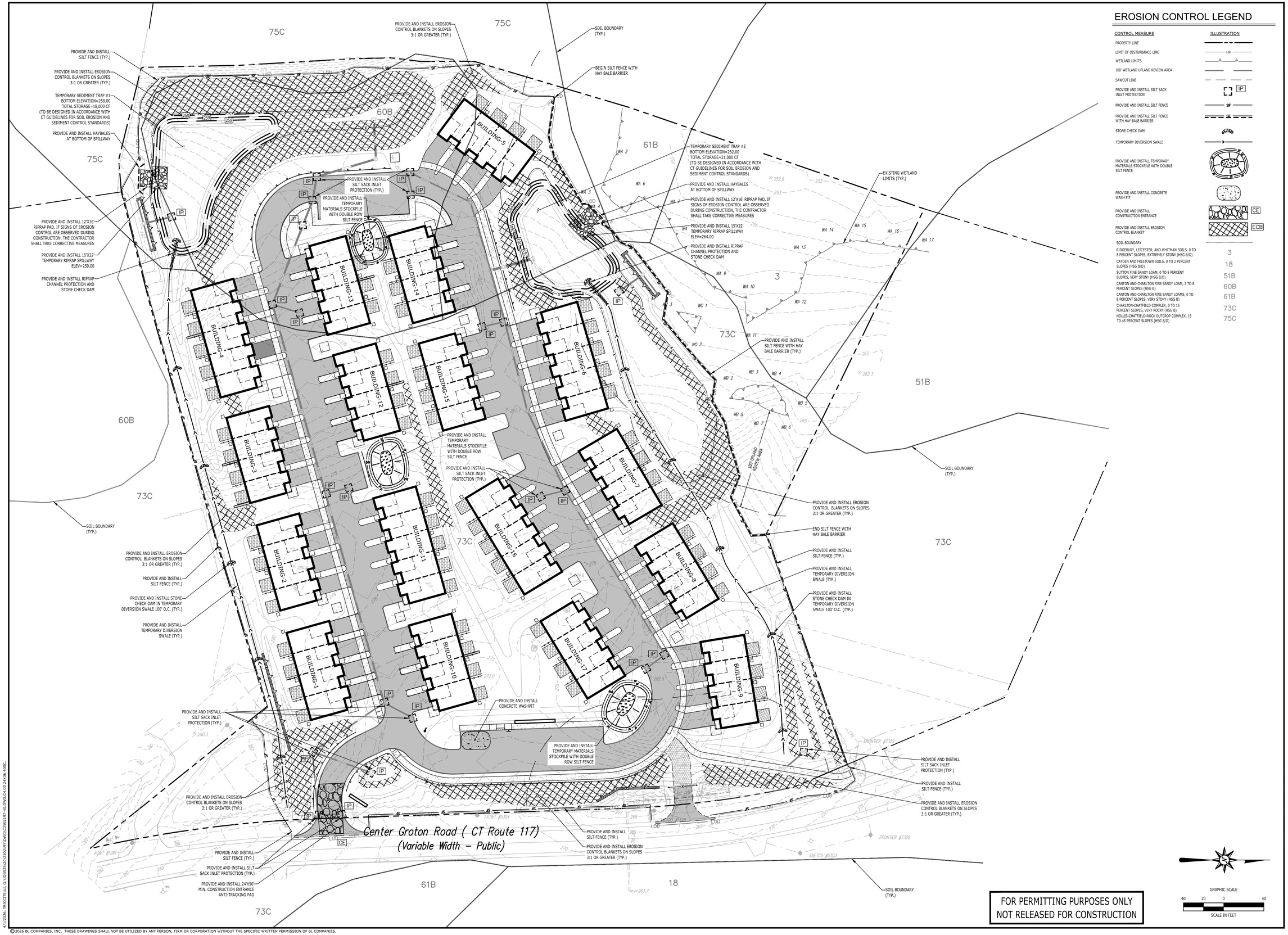

EROSION CONTROL LEGEND

CONTROL MEASURE	ILLUSTRATION
PROPERTY LINE	
LIMIT OF DISTURBANCE LINE	LOD
WETLAND LIMITS	
100' WETLAND UPLAND REVIEW AREA	
SAWCUT LINE	
PROVIDE AND INSTALL SILT SACK INLET PROTECTION	IP
PROVIDE AND INSTALL SILT FENCE	SF
PROVIDE AND INSTALL SILT FENCE WITH HAY BALE BARRIER	SF
STONE CHECK DAM	
TEMPORARY DIVERSION SWALE	
PROVIDE AND INSTALL TEMPORARY MATERIALS STOCKPILE WITH DOUBLE SILT FENCE	
PROVIDE AND INSTALL CONCRETE WASH PIT	
PROVIDE AND INSTALL CONSTRUCTION ENTRANCE	CE
PROVIDE AND INSTALL EROSION CONTROL BLANKET	ECB
SOIL BOUNDARY	
RIDGEBURY, LEICESTER, AND WHITMAN SOILS, 0 TO 8 PERCENT SLOPES, EXTREMELY STONY (HSG B/D)	3
CATDEN AND FREETOWN SOILS, 0 TO 2 PERCENT SLOPES (HSG B/D)	18
SUTTON FINE SANDY LOAM, 0 TO 8 PERCENT SLOPES, VERY STONY (HSG B/D)	51B
CANTON AND CHARLTON FINE SANDY LOAM, 3 TO 8 PERCENT SLOPES (HSG B)	60B
CANTON AND CHARLTON FINE SANDY LOAMS, 0 TO 8 PERCENT SLOPES, VERY STONY (HSG B)	61B
CHARLTON-CHATFIELD COMPLEX, 0 TO 15 PERCENT SLOPES, VERY ROCKY (HSG B)	73C
HOLLIS-CHATFIELD-ROCK OUTCROP COMPLEX, 15 TO 45 PERCENT SLOPES (HSG B/D)	75C

FOR PERMITTING PURPOSES ONLY
NOT RELEASED FOR CONSTRUCTION

Architecture
Engineering
Environmental
Land Surveying
BL Companies
355 Research Parkway
Meriden, CT 06450
(203) 630-1406

STATE OF CONNECTICUT
JOHN C. SCHUMACHER
33260
LICENSED
PROFESSIONAL ENGINEER

PROPOSED MULTI-FAMILY RESIDENTIAL DEVELOPMENT
1947 CENTER GROTON ROAD
LEDYARD, CT 06339

No.	REVISIONS Date	Desc.

Designed	M.A.G.
Drawn	M.A.G.
Reviewed	R.M.R.
Scale	1"=40'
Project No.	2502197
Date	04/01/2026
CAD File:	C2502197-40

Title
EROSION & SEDIMENT CONTROL PLAN

Sheet No.
C4.00

Xref (s): X8250219740, X8250219731, X8250219710, X8250219720, X8250219740-G, X8250219725

4/1/2026, TRICCITELLI, G:\JOBS25\2025\2502197\DWG\C2502197-40.DWG,C4.00 24X36 40SC.

©2026 BL COMPANIES, INC. THESE DRAWINGS SHALL NOT BE UTILIZED BY ANY PERSON, FIRM OR CORPORATION WITHOUT THE SPECIFIC WRITTEN PERMISSION OF BL COMPANIES.

SEDIMENT AND EROSION CONTROL NOTES

SEDIMENT AND EROSION CONTROL NOTES - CONNECTICUT

SEDIMENT & EROSION CONTROL NARRATIVE
THE SEDIMENT AND EROSION CONTROL PLAN WAS DEVELOPED TO PROTECT THE EXISTING ROADWAY AND STORM DRAINAGE SYSTEMS, ADJACENT PROPERTIES, AND ANY ADJACENT WETLAND AREA AND ANY ADJACENT WATER COURSE FROM SEDIMENT LADEN SURFACE RUNOFF AND EROSION. A CONSTRUCTION SEQUENCE IS PROVIDED TO PROVIDE SURFACE RUNOFF EROSION CONTROLS PRIOR TO THE BEGINNING OF PROJECT DEMOLITION AND/OR CONSTRUCTION.

CONSTRUCTION SCHEDULE
THE ANTICIPATED STARTING DATE FOR CONSTRUCTION IS FALL 2027 WITH COMPLETION ANTICIPATED FALL 2028. APPROPRIATE SEDIMENT AND EROSION CONTROL MEASURES AS DESCRIBED HEREIN SHALL BE INSTALLED BY THE CONTRACTOR PRIOR TO THE COMMENCEMENT OF ALL DEMOLITION OR CONSTRUCTION ACTIVITY. SCHEDULE WORK TO MINIMIZE THE LENGTH OF TIME THAT BARE SOIL WILL BE EXPOSED.

CONTINGENCY EROSION PLAN
THE CONTRACTOR SHALL INSTALL ALL SPECIFIED SEDIMENT AND EROSION CONTROL MEASURES AND WILL BE REQUIRED TO MAINTAIN THEM IN THEIR INTENDED FUNCTIONING CONDITION. THE AGENTS OF THE MUNICIPALITY AND/OR INLAND WETLANDS COMMISSION AND/OR CIVIL ENGINEER SHALL HAVE THE AUTHORITY TO REQUIRE SUPPLEMENTAL MAINTENANCE OR ADDITIONAL MEASURES IF FIELD CONDITIONS ARE ENCOUNTERED BEYOND WHAT WOULD NORMALLY BE ANTICIPATED.

CONSTRUCTION SEQUENCE
THE FOLLOWING CONSTRUCTION SEQUENCE IS RECOMMENDED:

1. CONTACT MUNICIPALITY AND/OR INLAND WETLANDS COMMISSION AGENT AT LEAST FORTY-EIGHT (48) HOURS PRIOR TO COMMENCEMENT OF ANY DEMOLITION, CONSTRUCTION OR REGULATED ACTIVITY ON THIS PROJECT.
2. CLEARING LIMITS SHALL BE PHYSICALLY MARKED IN THE FIELD AND APPROVED BY THE MUNICIPALITY AND/OR INLAND WETLANDS COMMISSION AGENT PRIOR TO THE START OF WORK ON THE SITE. INSTALL TREE PROTECTION AND PERIMETER SILT FENCE.
3. CONSTRUCT STONE CONSTRUCTION ENTRANCE ANTI-TRACKING PADS AT CONSTRUCTION ENTRANCES/EXITS AND INSTALL FILTER FABRIC AROUND GRATES OF CATCH BASINS OR INSTALL SILT SACKS ON CATCH BASIN INLETS ON OFF SITE ROADS. INSTALL SILT FENCE AND OTHER EROSION CONTROL DEVICES INDICATED ON THESE PLANS AT PERIMETER OF PROPOSED SITE DISTURBANCE AND INSTALL ALL EROSION CONTROL MEASURES AND TREE PROTECTION INDICATED ON THESE PLANS. INSTALL SEDIMENT BASINS AND SEDIMENT TRAPS IF REQUIRED AT LOW AREAS OF SITE OR AS ORDERED BY THE ENGINEER OR AS SHOWN ON THESE PLANS.
4. CLEAR AND GRUB SITE. STOCKPILE CHIPS. STOCKPILE TOPSOIL. INSTALL SEDIMENT AND EROSION CONTROLS AT STOCKPILES.
5. BUILDING AND SITE DEMOLITION AND REMOVAL. PAVEMENT REMOVAL.
6. INSTALL SILT FENCE, CONSTRUCT DIVERSION SWALES, AND SEDIMENT TRAPS. COMMENCE INSTALLATION OF STORM DRAINAGE SYSTEM.
7. COMMENCE EARTHWORK. CONSTRUCT FILL SLOPE, ROADWAY, ABD RETAINING WALLS. INSTALL ADDITIONAL SEDIMENT AND EROSION CONTROLS AS WORK PROGRESSES AND CONTINUE STORM DRAINAGE SYSTEM CONSTRUCTION, TOPSOIL AND SEED SLOPES WHICH HAVE ACHIEVED FINAL SITE GRADING.
8. CONSTRUCTION STAKING OF ALL BUILDING CORNERS, UTILITIES, ACCESS DRIVES, AND PARKING AREAS.
9. ROUGH GRADING AND FILLING OF SUBGRADES AND SLOPES.
10. IMMEDIATELY UPON DISCOVERING UNFORESEEN CIRCUMSTANCES POSING THE POTENTIAL FOR ACCELERATED EROSION AND/OR SEDIMENT POLLUTION, THE OPERATOR SHALL IMPLEMENT APPROPRIATE BEST MANAGEMENT PRACTICES TO ELIMINATE THE POTENTIAL FOR ACCELERATED EROSION AND/OR SEDIMENT POLLUTION.
11. BEFORE DISPOSING OF SOIL OR RECEIVING BORROW FOR THE SITE, THE CONTRACTOR MUST PROVIDE EVIDENCE THAT EACH SPOIL OR BORROW AREA HAS A SEDIMENT AND EROSION CONTROL PLAN APPROVED BY THE MUNICIPALITY AND/OR INLAND WETLANDS COMMISSION AND WHICH IS BEING IMPLEMENTED AND MAINTAINED. THE CONTRACTOR SHALL ALSO NOTIFY THE MUNICIPALITY AND/OR INLAND WETLANDS COMMISSION IN WRITING OF ALL RECEIVING SPOIL AND BORROW AREAS WHEN THEY HAVE BEEN IDENTIFIED.
12. CONTINUE INSTALLATION OF STORM DRAINAGE AS SUBGRADE ELEVATIONS ARE ACHIEVED.
13. BUILDING FOUNDATION SUBGRADE AND PAD SUBGRADE PREPARATION.
14. BUILDING FOUNDATION CONSTRUCTION. BEGIN BUILDING SUPERSTRUCTURE
15. THROUGHOUT CONSTRUCTION SEQUENCE, REMOVE SEDIMENT FROM BEHIND SILT FENCES, HAY BALES AND OTHER EROSION CONTROL DEVICES, AND FROM SEDIMENT BASINS AND SEDIMENT TRAPS AS REQUIRED. REMOVAL SHALL BE ON A PERIODIC BASIS (EVERY SIGNIFICANT RAINFALL OF 0.25 INCH OR GREATER). INSPECTION OF SEDIMENT AND EROSION CONTROL MEASURES SHALL BE ON A WEEKLY BASIS AND AFTER EACH RAINFALL OF 0.25 INCHES OR GREATER. SEDIMENT COLLECTED SHALL BE DEPOSITED AND SPREAD EVENLY UPLAND ON SLOPES DURING CONSTRUCTION.
16. INSTALL SANITARY LATERAL AND UTILITIES. COMPLETE STORM DRAINAGE SYSTEM.
17. INSTALL SITE LIGHTING AND TRASH ENCLOSURE.
18. COMPLETE GRADING TO SUBGRADES AND CONSTRUCT PARKING AREA SUBGRADE.
19. CONSTRUCT CURBS, PAVEMENT STRUCTURE AND SIDEWALKS.
20. CONDUCT FINE GRADING.
21. PAVING OF PARKING AREAS AND DRIVEWAYS
22. FINAL FINE GRADING OF SLOPE AND NON-PAVED AREAS.
23. PLACE 4" TOPSOIL ON SLOPES AFTER FINAL GRADING IS COMPLETED. FERTILIZE SEED AND MULCH. SEED MIXTURE TO BE INSTALLED AUGUST 15-OCTOBER 1 USE EROSION CONTROL BLANKETS AS REQUIRED OR ORDERED FOR SLOPES GREATER THAN 3:1 AND AS SHOWN ON LANDSCAPE PLANS OR EROSION CONTROL PLANS. FOR TEMPORARY STABILIZATION BEYOND SEEDING DATES USE ANNUAL RYE AT 4.0 LBS/1,000 S.F. FERTILIZE WITH 10-10-10 AT 1.0 LBS. OF NITROGEN PER 1,000 S.F. AND LIME AT 100 LBS/1,000 S.F. (MAX.).
24. LANDSCAPE ISLANDS, INTERIOR NON-PAVED AREAS, AND PERIMETER AREAS.
25. INSTALL SIGNING AND PAVEMENT MARKINGS
26. CLEAN STORM DRAINAGE PIPE STRUCTURES, DETENTION SYSTEMS AND WATER QUALITY DEVICES OF DEBRIS AND SEDIMENT.
27. UPON DIRECTION OF THE MUNICIPALITY AND/OR INLAND WETLANDS COMMISSION AGENT, SEDIMENT AND EROSION CONTROL MEASURES SHALL BE REMOVED FOLLOWING STABILIZATION OF THE SITE.

OPERATION REQUIREMENTS

CLEARING AND GRUBBING OPERATIONS
1. ALL SEDIMENT AND EROSION CONTROL MEASURES, INCLUDING THE CONSTRUCTION OF TEMPORARY SEDIMENTATION BASINS AND STONE CONSTRUCTION ENTRANCE ANTI-TRACKING PADS, WILL BE INSTALLED PRIOR TO THE START OF CLEARING AND GRUBBING AND DEMOLITION OPERATIONS.
2. FOLLOWING INSTALLATION OF ALL SEDIMENT AND EROSION CONTROL MEASURES, THE CONTRACTOR SHALL NOT PROCEED WITH GRADING, FILLING OR OTHER CONSTRUCTION OPERATIONS UNTIL THE ENGINEER HAS INSPECTED AND APPROVED ALL INSTALLATIONS.
3. THE CONTRACTOR SHALL TAKE EXTREME CARE DURING CLEARING AND GRUBBING OPERATIONS SO AS NOT TO DISTURB UNPROTECTED WETLAND AREAS OR SEDIMENT AND EROSION CONTROL DEVICES.
4. FOLLOWING THE COMPLETION OF CLEARING AND GRUBBING OPERATIONS, ALL AREAS SHALL BE STABILIZED WITH TOPSOIL AND SEEDING OR CRUSHED STONE AS SOON AS PRACTICAL.

ROUGH GRADING OPERATIONS

1. DURING THE REMOVAL AND/OR PLACEMENT OF EARTH AS INDICATED ON THE GRADING PLAN, TOPSOIL SHALL BE STRIPPED AND APPROPRIATELY STOCKPILED FOR REUSE.
2. ALL STOCKPILED TOPSOIL SHALL BE SEEDED, MULCHED WITH HAY, AND ENCLOSED BY A SILTATION FENCE.

FILLING OPERATIONS

1. PRIOR TO FILLING, ALL SEDIMENT AND EROSION CONTROL DEVICES SHALL BE PROPERLY IMPLEMENTED, MAINTAINED AND FULLY INSTALLED, AS DIRECTED BY THE ENGINEER AND AS SHOWN ON THIS PLAN.
2. ALL FILL MATERIAL ADJACENT TO ANY WETLAND AREAS, IF APPLICABLE TO THIS PROJECT, SHALL BE GOOD QUALITY, WITH LESS THAN 5% FINES PASSING THROUGH A #200 SIEVE (BANK RUN), SHALL BE PLACED IN LIFT THICKNESSES NOT GREATER THAN THAT SPECIFIED IN PROJECT SPECIFICATIONS AND/OR THE PROJECT GEOTECHNICAL REPORT. LIFTS SHALL BE COMPACTED TO 95% MAX. DRY DENSITY MODIFIED PROCTOR OR AS SPECIFIED IN THE CONTRACT SPECIFICATIONS OR IN THE GEOTECHNICAL REPORT.
3. AS GENERAL GRADING OPERATIONS PROGRESS, ANY TEMPORARY DIVERSION DITCHES SHALL BE RAISED OR LOWERED, AS NECESSARY, TO DIVERT SURFACE RUNOFF TO THE SEDIMENT BASINS OR SEDIMENT TRAPS.

PLACEMENT OF DRAINAGE STRUCTURES, UTILITIES, AND BUILDING CONSTRUCTION OPERATIONS.

1. SILT FENCES SHALL BE INSTALLED AT THE DOWNHILL SIDES OF BUILDING EXCAVATIONS, MUD PUMP DISCHARGES, AND UTILITY TRENCH MATERIAL STOCKPILES. HAY BALES/STRAW BALES MAY BE USED IF SHOWN ON THE SEDIMENT AND EROSION CONTROL PLANS OR IF DIRECTED BY THE CIVIL ENGINEER.

FINAL GRADING AND PAVING OPERATIONS

1. ALL INLET AND OUTLET PROTECTION SHALL BE PLACED AND MAINTAINED AS SHOWN ON SEDIMENT AND EROSION CONTROL PLANS AND DETAILS, AND AS DESCRIBED IN SPECIFICATIONS AND AS DESCRIBED HEREIN.
2. NO CUT OR FILL SLOPES SHALL EXCEED 2:1 EXCEPT WHERE STABILIZED BY ROCK FACED EMBANKMENTS OR EROSION CONTROL BLANKETS, OR JUTE MESH AND VEGETATION. ALL SLOPES SHALL BE SEEDED, AND ANY ROAD OR DRIVEWAY SHOULDER AND BANKS SHALL BE STABILIZED IMMEDIATELY UPON COMPLETION OF FINAL GRADING UNTIL TURF IS ESTABLISHED.
3. PAVEMENT SUB-BASE AND BASE COURSES SHALL BE INSTALLED OVER AREAS TO BE PAVED AS SOON AS FINAL SUB-GRADES ARE ESTABLISHED AND UNDERGROUND UTILITIES AND STORM DRAINAGE SYSTEMS HAVE BEEN INSTALLED.
4. AFTER CONSTRUCTION OF PAVEMENT, TOPSOIL, FINAL SEED, MULCH AND LANDSCAPING, REMOVE ALL TEMPORARY SEDIMENT AND EROSION CONTROL DEVICES ONLY AFTER ALL AREAS HAVE BEEN PAVED AND/OR GRASS HAS BEEN WELL ESTABLISHED AND THE SITE IS STABLE AND HAS BEEN INSPECTED AND APPROVED BY THE MUNICIPALITY AND/OR INLAND WETLANDS COMMISSION.

INSTALLATION OF SEDIMENTATION AND EROSION CONTROL MEASURES

I. SILTATION FENCE
A. DIG A SIX INCH TRENCH ON THE UPHILL SIDE OF THE DESIGNATED FENCE LINE LOCATION.

B. POSITION THE POST AT THE BACK OF THE TRENCH (DOWNHILL SIDE), AND HAMMER THE POST AT LEAST 1.5 FEET INTO THE GROUND.

C. LAY THE BOTTOM SIX INCHES OF THE FABRIC INTO THE TRENCH TO PREVENT UNDERMINING BY STORM WATER RUN-OFF.

D. BACKFILL THE TRENCH AND COMPACT.

II. HAY BALES/STRAW BALES
A. BALES SHALL BE PLACED IN A SINGLE ROW, LENGTHWISE, ORIENTED PARALLEL TO THE CONTOUR, WITH ENDS OF ADJACENT BALES TIGHTLY ABUTTING ONE ANOTHER.

B. BALES SHALL BE ENTRENCHED AND BACKFILLED. A TRENCH SHALL BE EXCAVATED THE WIDTH OF A BALE AND THE LENGTH OF THE PROPOSED BARRIER TO A MINIMUM DEPTH OF FOUR INCHES. AFTER THE BALES ARE STAKED, THE EXCAVATED SOIL SHALL BE BACKFILLED AGAINST THE BARRIER.

C. EACH BALE SHALL BE SECURELY ANCHORED BY AT LEAST TWO (2) STAKES.

D. THE GAPS BETWEEN BALES SHALL BE WEDGED WITH STRAW TO PREVENT WATER LEAKAGE.

E. THE BARRIER SHALL BE EXTENDED TO SUCH A LENGTH THAT THE BOTTOMS OF THE END BALES ARE HIGHER IN ELEVATION THAN THE TOP OF THE LOWEST MIDDLE BALE, TO ENSURE THAT RUN-OFF WILL FLOW EITHER THROUGH OR OVER THE BARRIER, BUT NOT AROUND IT.

OPERATION AND MAINTENANCE OF SEDIMENT AND EROSION
CONTROL MEASURES
I. SILTATION FENCE
A. ALL SILTATION FENCES SHALL BE INSPECTED AS A MINIMUM WEEKLY OR AFTER EACH RAINFALL. ALL DETERIORATED FABRIC AND DAMAGED POSTS SHALL BE REPLACED AND PROPERLY REPOSITIONED IN ACCORDANCE WITH THIS PLAN.

B. SEDIMENT DEPOSITS SHALL BE REMOVED FROM BEHIND THE FENCE WHEN THEY REACH A MAXIMUM HEIGHT OF ONE FOOT.

II. HAY BALES/STRAW BALES
A. ALL HAY BALE/STRAW BALE RINGS SHALL BE INSPECTED FOLLOWING EACH RAINFALL. REPAIR OR REPLACEMENT SHALL BE PROMPTLY MADE AS NEEDED.

B. DEPOSITS SHALL BE REMOVED AND CLEANED-OUT IF ONE HALF OF THE ORIGINAL HEIGHT OF THE BALES BECOMES FILLED WITH SEDIMENT.

III. SEDIMENT BASINS/SEDIMENT TRAPS
A. CONTRACTOR TO KEEP WEEKLY CHECKLIST LOGS FOR INSPECTIONS OF ALL SEDIMENT AND EROSION CONTROL DEVICES AND HAVE THEM READILY AVAILABLE ON-SITE AT ALL TIMES FOR INSPECTION BY CT DEEP, LOCAL AUTHORITIES OR ENGINEER.

B. ALL SEDIMENT BASINS AND/OR SEDIMENT TRAPS SHALL BE INSPECTED FOLLOWING EACH RAINFALL. REPAIR OF SLOPES SHALL BE PROMPTLY MADE AS NEEDED.

C. SEDIMENT DEPOSITS SHALL BE REMOVED FROM SEDIMENT BASINS AND/OR SEDIMENT TRAPS WHEN THEY REACH A MAXIMUM HEIGHT OF ONE FOOT UNLESS OTHERWISE INDICATED ON THE EROSION CONTROL PLANS AND DETAILS TO BE AT A SPECIFIC ELEVATION PER CLEAN OUT MARKERS.

D. SEDIMENT SHALL BE DISPOSED OF ON-SITE OR AS DIRECTED BY THE ENGINEER AND LOCAL GOVERNING OFFICIALS. SEE SEDIMENT AND EROSION CONTROL NOTES HEREIN REGARDING DISPOSAL REQUIREMENTS FOR OFF SITE SPOIL DISPOSAL.

SEDIMENT AND EROSION CONTROL PLAN
1. HAY BALE/STRAW BALE FILTERS WILL BE INSTALLED AT ALL CULVERT OUTLETS IF CULVERT OUTLETS ARE APPLICABLE TO THIS PROJECT AND SILTATION FENCE INSTALLED ALONG THE TOE OF ALL CRITICAL CUT AND FILL SLOPES.
2. CULVERT DISCHARGE AREAS WILL BE PROTECTED WITH RIP RAP CHANNELS. ENERGY DISSIPATORS WILL BE INSTALLED AS SHOWN ON THESE PLANS AND AS NECESSARY.
3. CATCH BASINS WILL BE PROTECTED WITH HAY BALE/STRAW BALE FILTERS, SILT SACKS, SILTATION FENCE, OR OTHER INLET PROTECTION DEVICES PER DETAILS, THROUGHOUT THE CONSTRUCTION PERIOD AND UNTIL ALL DISTURBED AREAS ARE THOROUGHLY STABILIZED.
4. ALL SEDIMENT AND EROSION CONTROL MEASURES WILL BE INSTALLED IN ACCORDANCE WITH THE STANDARDS AND SPECIFICATIONS OF THE CT EROSION AND SEDIMENT CONTROL HANDBOOK LATEST EDITION.
5. SEDIMENT AND EROSION CONTROL MEASURES WILL BE INSTALLED PRIOR TO DEMOLITION AND/OR CONSTRUCTION WHENEVER POSSIBLE.
6. ALL CONTROL MEASURES WILL BE MAINTAINED IN EFFECTIVE CONDITION THROUGHOUT THE DEMOLITION AND CONSTRUCTION PERIOD UNTIL THE SITE IS DETERMINED TO BE STABILIZED BY THE AUTHORITY HAVING JURISDICTION.
7. ADDITIONAL CONTROL MEASURES WILL BE INSTALLED DURING THE CONSTRUCTION PERIOD, IF NECESSARY OR REQUIRED OR AS DIRECTED BY THE CIVIL ENGINEER OR BY THE AUTHORITY HAVING JURISDICTION.
8. SEDIMENT REMOVED FROM EROSION CONTROL STRUCTURES WILL BE DISPOSED IN A MANNER WHICH IS CONSISTENT WITH THE INTENT AND REQUIREMENTS OF THE SEDIMENT AND EROSION CONTROL PLANS, NOTES, AND DETAILS.
9. THE CONTRACTOR IS ASSIGNED THE RESPONSIBILITY FOR IMPLEMENTING THIS SEDIMENT AND EROSION CONTROL PLAN. THIS RESPONSIBILITY INCLUDES THE INSTALLATION AND MAINTENANCE OF CONTROL MEASURES, INFORMING ALL PARTIES ENGAGED ON THE CONSTRUCTION SITE OF THE REQUIREMENTS AND OBJECTIVES OF THE PLAN, NOTIFICATION OF THE MUNICIPALITY AND/OR INLAND WETLANDS COMMISSION OFFICE OR AUTHORITY HAVING JURISDICTION OF ANY TRANSFER OF THIS RESPONSIBILITY AND FOR CONVEYING A COPY OF THE SEDIMENT AND EROSION CONTROL PLAN IF THE TITLE TO THE LAND IS TRANSFERRED.

SEDIMENT AND EROSION CONTROL NOTES
1. THE SEDIMENT AND EROSION CONTROL PLAN IS ONLY INTENDED TO DESCRIBE THE SEDIMENT AND EROSION CONTROL TREATMENT FOR THIS SITE. SEE SEDIMENT AND EROSION CONTROL DETAILS AND CONSTRUCTION SEQUENCE. REFER TO SITE PLAN FOR GENERAL INFORMATION AND OTHER CONTRACT PLANS FOR APPROPRIATE INFORMATION.
2. THE OWNER IS RESPONSIBLE FOR IMPLEMENTING THIS SEDIMENT AND EROSION CONTROL PLAN. THIS RESPONSIBILITY INCLUDES THE PROPER INSTALLATION AND MAINTENANCE OF SEDIMENT AND EROSION CONTROL MEASURES, INFORMING ALL PARTIES ENGAGED WITH CONSTRUCTION ON THE SITE OF THE REQUIREMENTS AND OBJECTIVES OF THIS PLAN, INFORMING THE AUTHORITY HAVING JURISDICTION OR COUNTY SOILS CONSERVATION DISTRICT OR INLAND WETLANDS AGENCY OF ANY TRANSFER OF THIS RESPONSIBILITY, AND FOR CONVEYING A COPY OF THE SEDIMENT & EROSION CONTROL PLAN IF THE TITLE TO THE LAND IS TRANSFERRED.
3. AN EROSION CONTROL BOND MAY BE REQUIRED TO BE POSTED WITH THE MUNICIPALITY TO ENSURE IMPLEMENTATION OF THE SEDIMENT AND EROSION CONTROL MEASURES. THE CONTRACTOR SHALL BE RESPONSIBLE FOR THE POSTING OF THIS BOND AND FOR INQUIRIES TO THE MUNICIPALITY FOR INFORMATION ON THE METHOD, TYPE AND AMOUNT OF THE BOND POSTING UNLESS OTHERWISE DIRECTED BY THE OWNER.
4. VISUAL SITE INSPECTIONS SHALL BE CONDUCTED WEEKLY, AND AFTER EACH MEASURABLE PRECIPITATION EVENT OF 0.25 INCHES OR GREATER BY QUALIFIED PERSONNEL, TRAINED AND EXPERIENCED IN SEDIMENT AND EROSION CONTROL, TO ASCERTAIN THAT THE SEDIMENT AND EROSION CONTROL (E&S) BMPS ARE OPERATIONAL AND EFFECTIVE IN PREVENTING POLLUTION. A WRITTEN REPORT OF EACH INSPECTION SHALL BE KEPT, AND INCLUDE:
   A) A SUMMARY OF THE SITE CONDITIONS, E&S BMPS, AND COMPLIANCE; AND
   B) THE DATE, TIME, AND THE NAME OF THE PERSON CONDUCTING THE INSPECTION
5. THE CONTRACTOR SHALL CONSTRUCT ALL SEDIMENT AND EROSION CONTROLS IN ACCORDANCE WITH THE CT GUIDELINES FOR SOIL EROSION AND SEDIMENT CONTROL LATEST EDITION IN ACCORDANCE WITH THE CONTRACT DOCUMENTS, AND AS DIRECTED BY THE MUNICIPALITY AND/OR INLAND WETLANDS COMMISSION. THE CONTRACTOR SHALL KEEP A COPY OF THE GUIDELINES ON-SITE FOR REFERENCE DURING CONSTRUCTION.
6. ADDITIONAL AND/OR ALTERNATIVE SEDIMENT AND EROSION CONTROL MEASURES MAY BE INSTALLED DURING THE CONSTRUCTION PERIOD IF FOUND NECESSARY BY THE CONTRACTOR, OWNER, SITE ENGINEER, MUNICIPALITY AND/OR INLAND WETLANDS COMMISSION, OR GOVERNING AGENCIES. THE CONTRACTOR SHALL CONTACT THE OWNER AND APPROPRIATE GOVERNING AGENCIES FOR APPROVAL IF ALTERNATIVE CONTROLS OTHER THAN THOSE SHOWN ON THE PLANS ARE PROPOSED.
7. THE CONTRACTOR SHALL INSPECT ALL SEDIMENT AND EROSION CONTROLS BEFORE AND AFTER EACH STORM (0.25 INCHES OR GREATER RAINFALL), OR AT LEAST WEEKLY, TO VERIFY THAT THE CONTROLS ARE OPERATING PROPERLY AND MAKE REPAIRS WHERE NECESSARY.
8. THE CONTRACTOR SHALL KEEP A SUPPLY OF SEDIMENT AND EROSION CONTROL MATERIAL (HAY BALES, SILT FENCE, JUTE MESH, RIP RAP, ETC.) ON-SITE FOR MAINTENANCE AND EMERGENCY REPAIRS.
9. PROTECT EXISTING TREES THAT ARE TO BE SAVED BY FENCING AT THE DRIP LINE OR AS SHOWN WITH SNOW FENCE, ORANGE SAFETY FENCE, OR EQUIVALENT FENCING. ANY LIMB TRIMMING SHOULD BE DONE BEFORE CONSTRUCTION BEGINS IN THAT AREA; FENCING SHALL BE MAINTAINED AND REPAIRED DURING CONSTRUCTION.
10. INSTALL PERIMETER SEDIMENT AND EROSION CONTROLS PRIOR TO CLEARING OR CONSTRUCTION. ALL CONSTRUCTION SHALL BE CONTAINED WITHIN THE LIMIT OF DISTURBANCE, WHICH SHALL BE MARKED WITH SILT FENCE, SAFETY FENCE, HAY BALES, RIBBONS, OR OTHER MEANS PRIOR TO CLEARING. CONSTRUCTION ACTIVITY SHALL REMAIN ON THE UPHILL SIDE OF THE SILT FENCE UNLESS WORK IS SPECIFICALLY CALLED FOR ON THE DOWNHILL SIDE OF THE FENCE.
11. STONE CONSTRUCTION ENTRANCE ANTI-TRACKING PADS SHALL BE INSTALLED AT START OF CONSTRUCTION AND MAINTAINED THROUGHOUT THE DURATION OF CONSTRUCTION. THE LOCATION OF THE TRACKING PADS MAY CHANGE AS VARIOUS PHASES OF CONSTRUCTION ARE COMPLETED.
12. TOPSOIL SHALL BE STRIPPED AND STOCKPILED FOR USE IN FINAL LANDSCAPING. ALL EARTH STOCKPILES SHALL HAVE HAY BALES OR SILT FENCE AROUND THE LIMIT OF PILE. PILES SHALL BE TEMPORARILY SEEDED IF PILE IS TO REMAIN IN PLACE FOR MORE THAN ONE (1) MONTH.
13. SEDIMENT BASINS AND SEDIMENT TRAPS SHALL PROVIDE 134 CUBIC YARDS OF SEDIMENT STORAGE PER ACRE CONTRIBUTING TO THE BASIN. PROVIDE BASIN VOLUMES FOR ALL DISTURBANCE ON SITE.
14. COMPLY WITH REQUIREMENTS OF CGS SECTION 22A 430B, FOR STORMWATER DISCHARGE FROM CONSTRUCTION ACTIVITIES AND WITH CT DEEP RECORD KEEPING AND INSPECTION REQUIREMENTS.
15. STONE CONSTRUCTION ENTRANCE ANTI-TRACKING PADS SHALL BE INSTALLED PRIOR TO ANY ON SITE EXCAVATION AND SHALL BE MAINTAINED DURING ALL DEMOLITION, EXCAVATION AND CONSTRUCTION ACTIVITIES.
16. MINIMIZE LAND DISTURBANCES. SEED AND MULCH DISTURBED AREAS WITH TEMPORARY MIX AS SOON AS PRACTICABLE (ONE WEEK MAXIMUM UNSTABILIZED PERIOD) USING PERENNIAL RYEGRASS AT 40 LBS PER ACRE. MULCH ALL CUT AND FILL SLOPES AND SWALES WITH LOOSE HAY AT A RATE OF 2 TONS PER ACRE. IF NECESSARY, REPLACE LOOSE HAY ON SLOPES WITH EROSION CONTROL BLANKETS OR JUTE CLOTH. MODERATELY GRADED AREAS, ISLANDS, AND TEMPORARY CONSTRUCTION STAGING AREAS MAY BE HYDROSEEDED WITH TACKIFIER.
17. MAINTAIN EXISTING PAVED AREAS FOR CONSTRUCTION STAGING FOR AS LONG AS POSSIBLE.
18. SILT FENCE AND OTHER SEDIMENT AND EROSION CONTROL MEASURES SHALL BE INSTALLED IN ACCORDANCE WITH CONTRACT DRAWINGS AND MANUFACTURER'S RECOMMENDATIONS PRIOR TO WORK IN ANY UPLAND AREAS.
19. EXCAVATED MATERIAL FROM TEMPORARY SILT TRAPS MUST BE STOCKPILED ON UPHILL SIDE OF SILT FENCE.
20. INSTALL SILT FENCE ACCORDING TO MANUFACTURER'S INSTRUCTION, PARTICULARLY, BURY LOWER EDGE OF FABRIC INTO GROUND. SILT FENCE SHALL BE TENCATE ENVIROFENCE, PROPEX GEOTEX OR EQUIVALENT APPROVED BY THE CIVIL ENGINEER. FILTER FABRIC USED SHALL BE TENCATE 140N OR 170N, OR APPROVED EQUIVALENT. SEE SPECIFICATIONS FOR FURTHER INFORMATION.
21. WHERE INDICATED ON SEDIMENT AND EROSION CONTROL PLANS USE NEW HAY/STRAW BALES AND REPLACE THEM WHENEVER THEIR CONDITION DETERIORATES BEYOND REASONABLE USABILITY. STAKE BALES SECURELY INTO GROUND AND BUTT TIGHTLY TOGETHER TO PREVENT UNDERCUTTING AND BYPASSING.
22. INSTALL TEMPORARY DIVERSION DITCHES, PLUNGE POOLS, SEDIMENT BASINS, SEDIMENT TRAPS, CONCRETE WASH PITS AND DEWATERING PITS AS SHOWN AND AS NECESSARY DURING VARIOUS PHASES OF CONSTRUCTION TO CONTROL RUNOFF UNTIL UPHILL AREAS ARE DETERMINED TO BE STABILIZED BY THE AUTHORITY HAVING JURISDICTION. LOCATION OF TEMPORARY SEDIMENT BASINS WILL REQUIRE REVIEW AND APPROVAL BY THE CIVIL ENGINEER AND AUTHORITY HAVING JURISDICTION.
23. DIRECT ALL DEWATERING PUMP DISCHARGE TO A SEDIMENT CONTROL DEVICE SUCH AS TEMPORARY PITS, SEDIMENT TRAP, SEDIMENT BASINS OR GRASS FILTERS WITHIN THE APPROVED LIMIT OF DISTURBANCE. DISCHARGE TO STORM DRAINAGE SYSTEM OR SURFACE WATERS FROM SEDIMENT CONTROLS SHALL BE CLEAR.
24. BLOCK END OF STORM SEWERS IN EXPOSED TRENCHES WITH BOARDS AND SANDBAGS AT THE END OF EACH WORKING DAY WHEN RAIN IS EXPECTED.
25. SWEEP AFFECTED PORTIONS OF OFF SITE ROADS ONE OR MORE TIMES A DAY (OR LESS FREQUENTLY IF TRACKING IS NOT A PROBLEM) DURING CONSTRUCTION. OTHER DUST CONTROL MEASURES TO BE USED AS NECESSARY INCLUDE WATERING DOWN DISTURBED AREAS, USING CALCIUM CHLORIDE, AND COVERING LOADS ON DUMP TRUCKS.
26. PERIODICALLY CHECK ACCUMULATED SEDIMENT LEVELS IN THE SEDIMENT BASINS AND SEDIMENT TRAPS DURING CONSTRUCTION AND CLEAN ACCUMULATED SILT WHEN NECESSARY OR WHEN ONE FOOT OF SEDIMENT HAS ACCUMULATED OR PER SPECIFIC CLEANOUT MARKER ELEVATION. CLEAN ACCUMULATED SEDIMENT FROM CATCH BASIN SUMPS AS NECESSARY AND AS DIRECTED BY THE CIVIL ENGINEER OR OWNER'S CONSTRUCTION REPRESENTATIVE. REMOVE ACCUMULATED SEDIMENT FROM BEHIND HAY/STRAW BALES AND SILT FENCE WHEN LEVEL REACHES HALF THE HEIGHT OF THE BALE OR ONE FOOT AT SILT FENCE. DISPOSE OF SEDIMENT LEGALLY EITHER ON OR OFF SITE.
27. IMMEDIATELY UPON DISCOVERING UNFORESEEN CIRCUMSTANCES POSING THE POTENTIAL FOR ACCELERATED EROSION AND/OR SEDIMENT POLLUTION, THE OPERATOR SHALL IMPLEMENT APPROPRIATE BEST MANAGEMENT PRACTICES TO ELIMINATE THE POTENTIAL FOR ACCELERATED EROSION AND/OR SEDIMENT POLLUTION.
28. ALL PUMPING OF SEDIMENT LADEN WATER SHALL BE THROUGH A SEDIMENT CONTROL BMP, SUCH AS A PUMPED WATER FILTER BAG OR EQUIVALENT SEDIMENT REMOVAL FACILITY, OVER UNDISTURBED VEGETATED AREAS.
29. ALL EXCAVATED MATERIAL SHALL BE PLACED ON THE HIGH SIDE OF UTILITY AND STORM PIPE TRENCHES SO AS TO ALLOW THE TRENCH TO INTERCEPT ALL SILT LADEN RUNOFF.
30. CONTRACTOR SHALL ONLY EXCAVATE AS MUCH UTILITY AND STORM PIPE TRENCH WORK AS CAN BE COMPLETED, BACKFILLED AND STABILIZED IN ONE DAY SO AS TO LIMIT THE AMOUNT OF OPEN, DISTURBED TRENCHING.
31. ANY STOCKPILES OF STRIPPED MATERIALS ARE TO BE PERIODICALLY SPRAYED WITH WATER OR A CRUSTING AGENT TO STABILIZE POTENTIALLY WIND-BLOWN MATERIAL. HAUL ROADS BOTH INTO AND AROUND THE SITE ARE TO BE SPRAYED AS NEEDED TO SUPPRESS DUST. TRUCKS HAULING IMPORT FILL MATERIAL ARE TO BE TARPED TO AID IN THE CONTROL OF AIRBORNE DUST. DURING HIGH WIND EVENTS (20 TO 30 MPH SUSTAINED) CONSTRUCTION ACTIVITY SHALL BE LIMITED OR CEASED IF DUST CANNOT BE CONTROLLED BY WETTING.
32. AN AREA SHALL BE CONSIDERED TO HAVE ACHIEVED FINAL STABILIZATION WHEN IT HAS A MINIMUM OF 70% UNIFORM PERENNIAL VEGETATIVE COVER OR OTHER PERMANENT NON-VEGETATIVE COVER WITH A DENSITY SUFFICIENT TO RESIST ACCELERATED SURFACE EROSION AND SUBSURFACE CHARACTERISTICS SUFFICIENT TO RESIST SLIDING OR OTHER MOVEMENTS UNLESS OTHERWISE DETERMINED BY THE AUTHORITY HAVING JURISDICTION.
33. MAINTAIN ALL PERMANENT AND TEMPORARY EROSION AND SEDIMENT CONTROL DEVICES IN EFFECTIVE CONDITION THROUGHOUT THE CONSTRUCTION PERIOD. UPON COMPLETION OF WORK SWEEP PARKING LOT AND REMOVE ALL TEMPORARY EROSION AND SEDIMENT CONTROLS WHEN AUTHORIZED BY AUTHORITY HAVING JURISDICTION. FILE NOT (NOTICE OF TERMINATION) WITH AUTHORITY HAVING JURISDICTION RESPONSIBLE FOR REGULATING STORM WATER DISCHARGES FROM CONSTRUCTION ACTIVITIES PER NPDES.

FOR PERMITTING PURPOSES ONLY
NOT RELEASED FOR CONSTRUCTION

Architecture
Engineering
Environmental
Land Surveying

BL Companies

355 Research Parkway
Meriden, CT 06450
(203) 630-1406

STATE OF CONNECTICUT
AARON D. SCHUMACHER
33269
LICENSED
PROFESSIONAL ENGINEER

PROPOSED MULTI-FAMILY
RESIDENTIAL DEVELOPMENT
1947 CENTER GROTON ROAD
LEDYARD, CT 06339

REVISIONS

No.	Date	Desc.

Designed	M.A.G.
Drawn	M.A.G.
Reviewed	R.M.R.
Scale	NONE
Project No.	2502197
Date	04/01/2026
CAD File:	C2502197-40

Title
EROSION & SEDIMENT CONTROL NOTES

Sheet No.
C4.100

Xref (s): ; XB2502197-00 ; XY250219701 ; XC2502197-10 ; XC2502197-20 ; XC2502197-40 ; XC2502197-25
4/1/2026, TRICCITELLI, G:\JOBS25\20\2502197\DWG\C2502197-40.DWG.C4.100 24X36.

© 2026 BL COMPANIES, INC. THESE DRAWINGS SHALL NOT BE UTILIZED BY ANY PERSON, FIRM OR CORPORATION WITHOUT THE SPECIFIC WRITTEN PERMISSION OF BL COMPANIES.

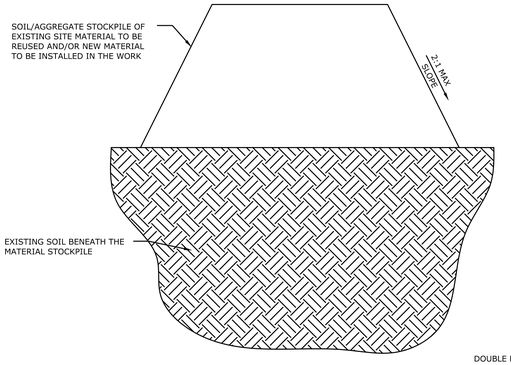

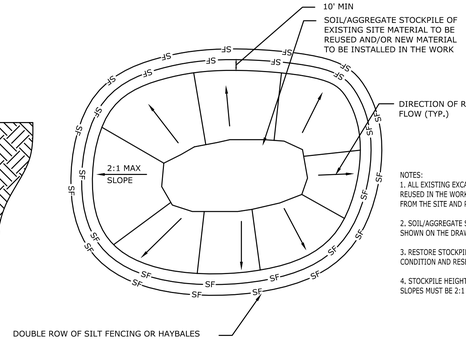

NOTES:
1. ALL EXISTING EXCAVATED MATERIAL THAT IS NOT TO BE REUSED IN THE WORK IS TO BE IMMEDIATELY REMOVED FROM THE SITE AND PROPERLY DISPOSED OF.

2. SOIL/AGGREGATE STOCKPILE SITES TO BE WHERE SHOWN ON THE DRAWINGS.

3. RESTORE STOCKPILE SITES TO PRE-EXISTING PROJECT CONDITION AND RESEED AS REQUIRED.

4. STOCKPILE HEIGHTS MUST NOT EXCEED 35'. STOCKPILE SLOPES MUST BE 2:1 OR FLATTER.

MATERIALS STOCKPILE DETAIL

N.T.S. BLEC-006

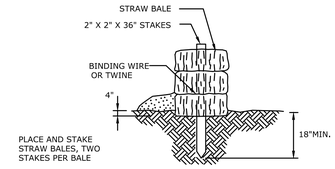

STRAW BALE BARRIERS SHOULD NOT BE USED FOR MORE THAN 3 MONTHS

SEDIMENT MUST BE REMOVED WHEN ACCUMULATIONS REACH 1/3 THE ABOVE GROUND HEIGHT OF THE BARRIER.

ANY SECTION OF STRAW BALE BARRIER WHICH HAS BEEN UNDERMINED OR TOPPED MUST BE IMMEDIATELY REPLACED WITH A ROCK FILTER OUTLET.

HAY BALE DETAIL

N.T.S. BLEC-007

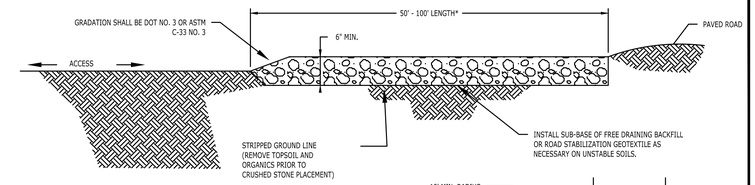

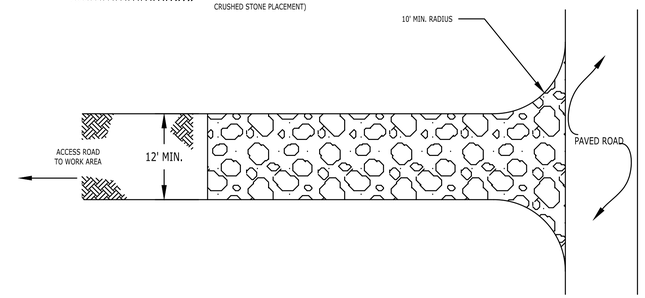

TYPICAL CONSTRUCTION ENTRANCE

N.T.S. CT DEEP CE-2

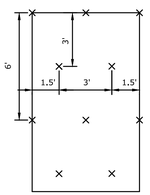

STAPLE PATTERN "C"

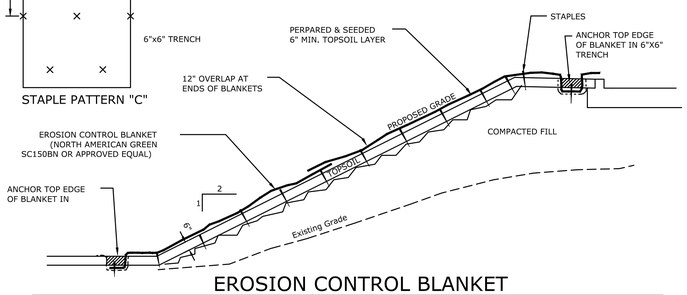

EROSION CONTROL BLANKET

N.T.S. BLEC-009

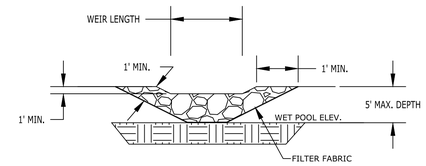

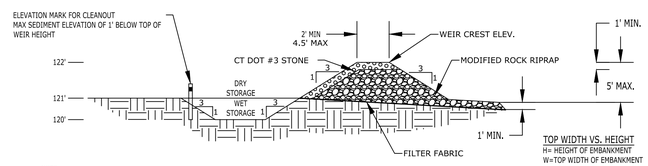

NOTE:
1. ALL DETAIL INFORMATION SHOULD BE USED AS A GUIDELINE. ALL TEMPORARY SEDIMENT TRAPS MUST CONFORM TO THE CT DEEP GUIDELINES FOR SOIL EROSION AND SEDIMENT CONTROL MANUAL.

2. THE VOLUME OF THE WET STORAGE SHALL BE AT LEAST TWICE THE VOLUME OF THE SEDIMENT STORAGE VOLUME AND SHALL BE DESIGNED TO A MINIMUM DEPTH OF 2 FEET, PER CT DEEP CONNECTICUT GUIDELINES FOR SOIL EROSION AND SEDIMENT CONTROL MANUAL.

TOP WIDTH VS. HEIGHT
H= HEIGHT OF EMBANKMENT
W=TOP WIDTH OF EMBANKMENT

H(ft)	W (ft)
1.5	2.0
2.0	2.0
2.5	2.5
3.0	2.5
3.5	3.0
4.0	3.0
4.5	4.0
5.0	4.5

TEMP. SEDIMENT TRAP #1

ELEVATION (FEET)	SURFACE AREA (SF)	INC. STORAGE (CF)	CUM. STORAGE (CF)
258.0	7,905	0	0
259.0	9,154	8,530	8,530
260.0	10,460	9,807	18,337

TEMP. SEDIMENT TRAP #2

ELEVATION (FEET)	SURFACE AREA (SF)	INC. STORAGE (CF)	CUM. STORAGE (CF)
262.0	5,602	0	0
263.0	6,524	6,063	6,063
264.0	7,502	7,013	13,076
265.0	8,537	8,020	21,096

TEMPORARY SEDIMENT TRAP

N.T.S. BLEC-002

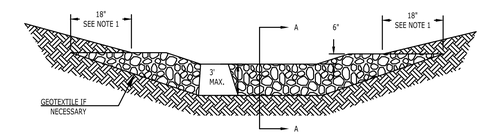

VIEW LOOKING UPSTREAM
(NOT TO SCALE)

NOTES:
1) KEY STONE INTO THE DITCH BANKS AND EXTEND INTO THE ABUTMENTS A MINIMUM OF 18" TO PREVENT FLOW FROM FLANKING THE CHECK DAM.

2) THE MINIMUM DESIGN CAPACITY SHALL CONVEY A 2 YEAR - 24 HOUR PEAK FLOW.

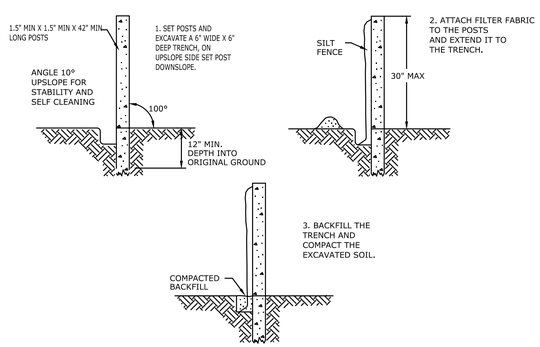

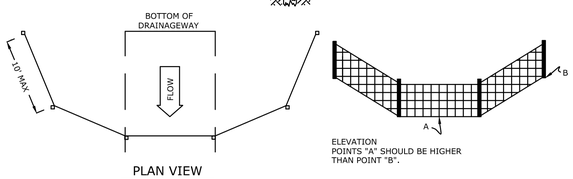

PLAN VIEW

ELEVATION
POINTS "A" SHOULD BE HIGHER THAN POINT "B".

SILT FENCE BARRIER

N.T.S. CTEC-003

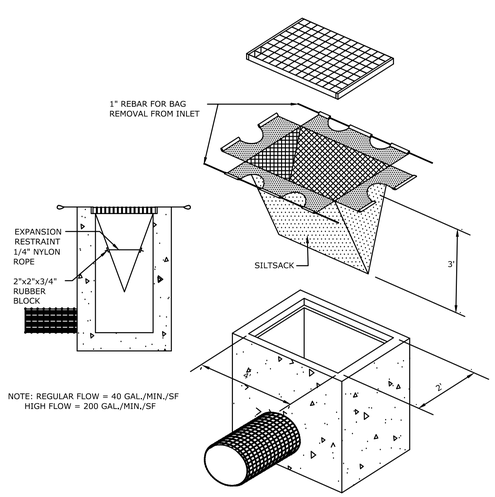

NOTE: REGULAR FLOW = 40 GAL./MIN./SF
HIGH FLOW = 200 GAL./MIN./SF

SILTSACK DETAIL

N.T.S. BLEC-005

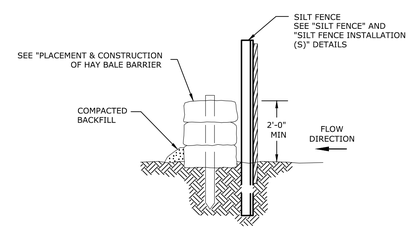

BACKFILL AND COMPACT THE EXCAVATED SOIL AS SHOWN ON THE UPHILL SIDE OF THE BARRIER TO PREVENT PIPING

SILT FENCE WITH HAY BALE BARRIER

N.T.S. ZEC-003

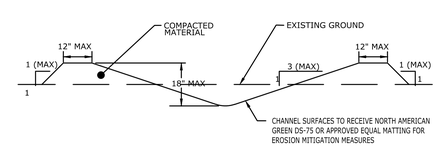

NON-ENGINEERED TEMPORARY DIVERSION DITCH DETAIL

N.T.S.

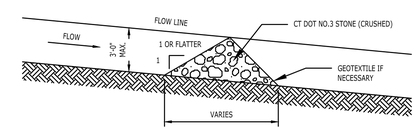

SECTION A-A
(NOT TO SCALE)

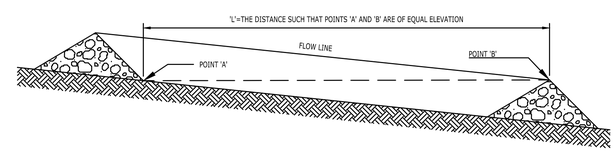

SPACING BETWEEN CHECK DAMS
(NOT TO SCALE)

STONE CHECK DAM INSTALLATION IN DRAINGAGEWAYS

N.T.S. FIGURE SCD-2

FOR PERMITTING PURPOSES ONLY
NOT RELEASED FOR CONSTRUCTION

Architecture
Engineering
Environmental
Land Surveying
BL Companies
355 Research Parkway
Meriden, CT 06450
(203) 630-1406

STATE OF CONNECTICUT
MARK S. SCHUMACHER
33268
LICENSED
PROFESSIONAL ENGINEER

PROPOSED MULTI-FAMILY RESIDENTIAL DEVELOPMENT
1947 CENTER GROTON ROAD
LEDYARD, CT 06339

No.	REVISIONS Date	Desc.

Designed	M.A.G.
Drawn	M.A.G.
Reviewed	R.M.R.
Scale	NONE
Project No.	2502197
Date	04/01/2026
CAD File:	C2502197-40

Title
EROSION & SEDIMENT CONTROL DETAILS

Sheet No.
C4.101

Ref (s): XREF2502197-40, XC2502197-25, XC2502197-20, XC2502197-10, XC2502197-01, XC2502197-07, XB2502197-01

4/1/2026, TRICCITELLI, G:\JOBS25\20\2502197\DWG\C2502197-40.DWG,C4.101 24X36.

© 2026 BL COMPANIES, INC. THESE DRAWINGS SHALL NOT BE UTILIZED BY ANY PERSON, FIRM OR CORPORATION WITHOUT THE SPECIFIC WRITTEN PERMISSION OF BL COMPANIES.

LANDSCAPE REQUIREMENTS INFORMATION

LOCATION: LEDYARD, CT

ZONE: LCDD (LEDYARD CENTER DEVELOPMENT DISTRICT)

USE: TOWNHOMES (AS A RIGHT; SITE PLAN APPROVAL)

ITEM #	ITEM	REQUIREMENTS	PROPOSED	VARIANCE
1	PUBLIC OR PRIVATE UTILITY INSTALLATIONS ZONING REGULATIONS–SEC 8.27.A.2.	ANY EQUIPMENT OR UTILITY FACILITIES NOT LOCATED IN A BUILDING SHALL BE ENCLOSED ON ALL SIDES BY EVERGREEN SHRUBS OR TREES, OR BY BUILDINGS, FENCES, WALLS OR EMBANKMENTS SO AS TO BE SCREENED FROM VIEW FROM ANY OTHER LOT OR FROM ANY STREET	EVERGREEN SHRUBS PROP. TO SCREEN ANY EQUIPMENT OR UTILITY FACILITIES.	NO
2	RESIDENCE, MULTI–FAMILY (APARTMENTS, CONDOMINIUMS, TOWNHOUSES) – BUFFERS ZONING REGULATIONS–SEC 8.28.D.1.	A SUITABLE LANDSCAPED BUFFER STRIP NOT LESS THAN 10 FEET WIDE SHALL BE PROVIDED ALONG THE PARCEL'S SIDE AND REAR BOUNDARY LINES.	MINIMUM 10 FEET WIDE BUFFER AREA PROP. ALONG THE PARCEL'S SIDE AND REAR BOUNDARY LINES.	NO
3	PERIMETER LANDSCAPE AREA REQUIREMENTS ZONING REGULATIONS–SEC 9.3.C.	THE LANDSCAPED AREAS SHALL BE A MINIMUM OF 10 FEET IN WIDTH BETWEEN ADJACENT PROPERTIES	MINIMUM 10 FEET WIDE BUFFER AREA PROP. ALONG THE PARCEL'S SIDE AND REAR BOUNDARY LINES.	NO
4	PARKING FACILITIES – OTHER STANDARDS ZONING REGULATIONS–SEC 9.4.4.C.3.	ALL INTERIOR LANDSCAPED ISLANDS SHALL BE A MINIMUM WIDTH OF 18 FEET	COMPLIES, ALL INTERIOR LANDSCAPED ISLANDS HAVE A MINIMUM WIDTH OF 18 FEET.	NO
5	PARKING LOT LANDSCAPING REQUIREMENTS ZONING REGULATIONS–SEC 9.4.6.	ANY LOT THAT CONTAINS PARKING FACILITIES FOR MORE THAN 10 CARS SHALL PROVIDE LANDSCAPED END ISLANDS AND AT LEAST 1 LANDSCAPED CENTER ISLAND (PER 20) WITHIN THE PARKING AREA.	END ISLANDS WITH LANDSCAPING ARE PROVIDED.	NO

NOTES:
1) ALL SUBSTITUTIONS MUST RECEIVE APPROVAL FROM THE LANDSCAPE ARCHITECT PRIOR TO DELIVERY TO SITE.

2) PROVIDE AND INSTALL ALL PLANTS SHOWN ON THE PLANTING PLAN DRAWINGS; THE QUANTITIES IN THE PLANT LIST ARE PROVIDED FOR THE CONTRACTOR'S CONVENIENCE ONLY. IF DISCREPANCIES OCCUR, THE LARGER QUANTITY SHALL APPLY.

3) IF THERE IS A DISCREPANCY BETWEEN BOTANICAL AND COMMON NAME, BOTANICAL NAME PREVAILS.

PLANT SCHEDULE

SYMBOL	CODE	QTY	BOTANICAL NAME	COMMON NAME	SIZE	CONTAINER
TREES						
	AR	6	ACER RUBRUM 'FRANK JR.'	REDPOINTE®MAPLE	2–2.5" CAL.	B&B
	AG	17	AMELANCHIER X GRANDIFLORA 'AUTUMN BRILLIANCE'	AUTUMN BRILLIANCE APPLE SERVICEBERRY	2–2.5" CAL.	B&B
	CK	17	CORNUS KOUSA	KOUSA DOGWOOD	2–2.5" CAL.	B&B
	MS	17	MAGNOLIA STELLATA 'ROYAL STAR'	ROYAL STAR MAGNOLIA	2–2.5" CAL.	B&B
	MX	21	MALUS X 'SNOWDRIFT'	SNOWDRIFT CRABAPPLE	2–2.5" CAL.	B&B
	PY	2	PRUNUS X YEDOENSIS 'AKEBONO'	AKEBONO YOSHINO CHERRY	2–2.5" CAL.	B&B
	QP	13	QUERCUS PALUSTRIS	PIN OAK	2–2.5" CAL.	B&B
SHRUBS						
	ADV	96	AZALEA X 'DELAWARE VALLEY WHITE'	VALLEY WHITE AZALEA	12"–18" HT. & SPD.	CONT.
	ICS	123	ILEX CRENATA 'SOFT TOUCH'	SOFT TOUCH JAPANESE HOLLY	18"–21" HT. & SPD.	CONT.
	IGS	154	ILEX GLABRA 'SHAMROCK'	SHAMROCK INKBERRY HOLLY	24"–30" HT. & SPD.	CONT.
	IMB	12	ILEX X MESERVEAE 'BLUE PRINCESS'	BLUE PRINCESS HOLLY	24"–36" HT. & SPD.	CONT.
	IVS	108	ITEA VIRGINICA 'SPRICH'	LITTLE HENRY®SWEETSPIRE	18"–24" HT. & SPD.	CONT.
	SBA	129	SPIRAEA X BUMALDA 'ANTHONY WATERER'	ANTHONY WATERER SPIREA	18"–24" HT. & SPD.	CONT.
GROUNDCOVER						
	HHR	105	HEMEROCALLIS X 'HAPPY RETURNS'	HAPPY RETURNS DAYLILY	1 GAL	CONT.
	JBH	101	JUNIPERUS HORIZONTALIS 'BAR HARBOR'	BAR HARBOR CREEPING JUNIPER	3 GAL.	CONT.

LANDSCAPE PLAN LEGEND

PROPERTY LINE

LOD — LIMIT OF DISTURBANCE LINE

PROVIDE AND INSTALL LAWN SEED MIX FOR ALL DISTURBED AREA UNLESS OTHERWISE NOTED

PROVIDE AND INSTALL BASIN SEED MIX

PROVIDE AND INSTALL CONSERVATION SEED MIX

GRAPHIC SCALE
40 20 0 40
SCALE IN FEET

SEE SHEET C5.100 FOR LANDSCAPE NOTES AND DETAILS

SEE SHEET C5.00 FOR DETAILED PLANT SCHEDULE

FOR PERMITTING PURPOSES ONLY
NOT RELEASED FOR CONSTRUCTION

Architecture
Engineering
Environmental
Land Surveying
BL Companies
355 Research Parkway
Meriden, CT 06450
(203) 630-1406

STATE OF CONNECTICUT
NICHOLAS YOHN SCHUMACHER
33280
LICENSED
PROFESSIONAL ENGINEER

PROPOSED MULTI-FAMILY RESIDENTIAL DEVELOPMENT
1947 CENTER GROTON ROAD
LEDYARD, CT 06339

REVISIONS
No. Date Desc.

Designed N.Y.Y.
Drawn N.Y.Y.
Reviewed D.J.C.
Scale 1"=40'
Project No. 2502197
Date 04/01/2026
CAD File: C2502197-S0

Title
LANDSCAPING PLAN

Sheet No.
C5.00

© 2026 BL COMPANIES, INC. THESE DRAWINGS SHALL NOT BE UTILIZED BY ANY PERSON, FIRM OR CORPORATION WITHOUT THE SPECIFIC WRITTEN PERMISSION OF BL COMPANIES.

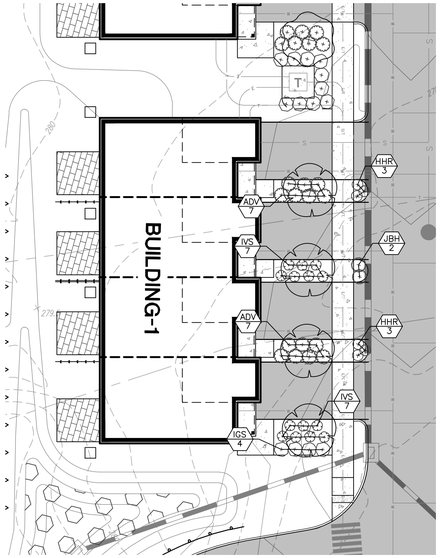

GRAPHIC SCALE
20 10 0 20
SCALE IN FEET

BUILDING 1 ENLARGEMENT

1"=20'

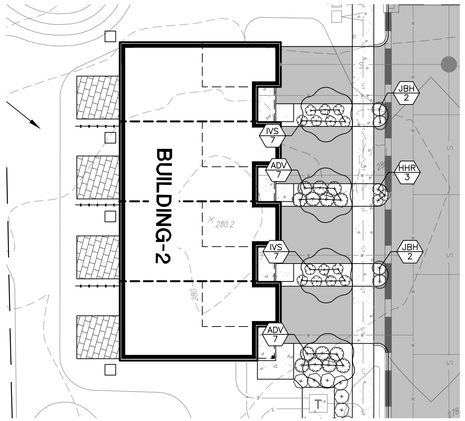

GRAPHIC SCALE
20 10 0 20
SCALE IN FEET

BUILDING 2 ENLARGEMENT

1"=20'

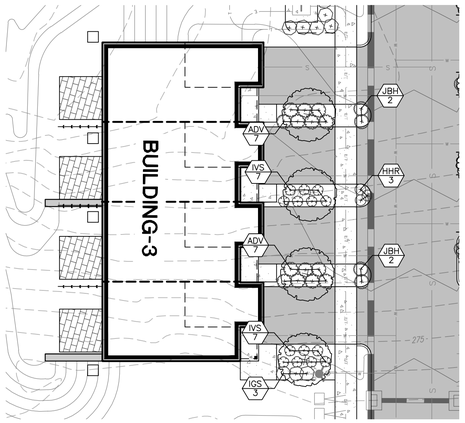

GRAPHIC SCALE
20 10 0 20
SCALE IN FEET

BUILDING 3 ENLARGEMENT

1"=20'

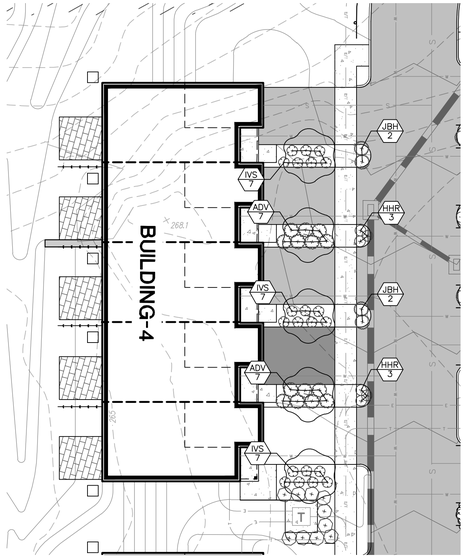

GRAPHIC SCALE
20 10 0 20
SCALE IN FEET

BUILDING 4 ENLARGEMENT

1"=20'

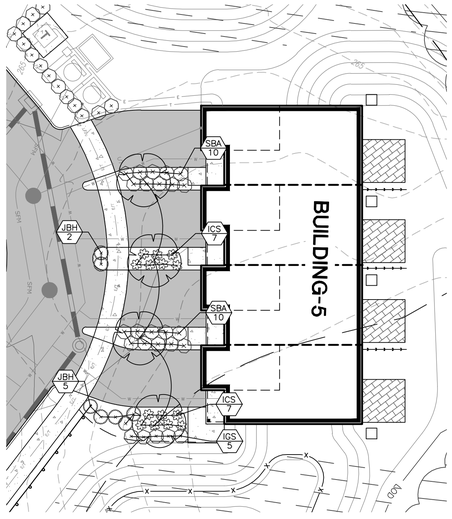

GRAPHIC SCALE
20 10 0 20
SCALE IN FEET

BUILDING 5 ENLARGEMENT

1"=20'

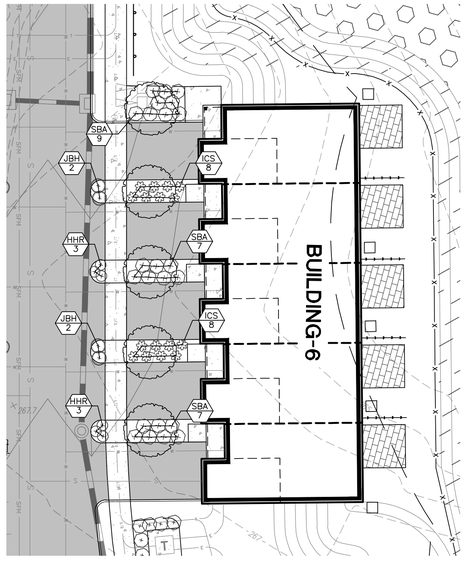

GRAPHIC SCALE
20 10 0 20
SCALE IN FEET

BUILDING 6 ENLARGEMENT

1"=20'

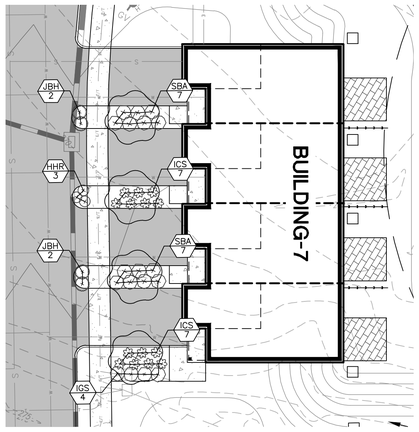

GRAPHIC SCALE
20 10 0 20
SCALE IN FEET

BUILDING 7 ENLARGEMENT

1"=20'

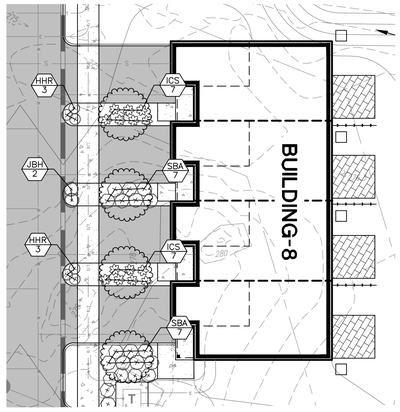

GRAPHIC SCALE
20 10 0 20
SCALE IN FEET

BUILDING 8 ENLARGEMENT

1"=20'

SEE SHEET C5.100 FOR LANDSCAPE NOTES AND DETAILS

SEE SHEET C5.00 FOR DETAILED PLANT SCHEDULE

FOR PERMITTING PURPOSES ONLY
NOT RELEASED FOR CONSTRUCTION

Architecture
Engineering
Environmental
Land Surveying
BL Companies
355 Research Parkway
Meriden, CT 06450
(203) 630-1406

STATE OF CONNECTICUT
NOAH D. SCHULKOSKY
33266
LICENSED
PROFESSIONAL ENGINEER

PROPOSED MULTI-FAMILY RESIDENTIAL DEVELOPMENT

1947 CENTER GROTON ROAD
LEDYARD, CT 06339

REVISIONS		
No.	Date	Desc.

Designed	N.Y.Y.
Drawn	N.Y.Y.
Reviewed	D.J.C.
Scale	1"=20'
Project No.	2502197
Date	04/01/2026
CAD File: C2502197-50	

Title
LANDSCAPE PLAN ENLARGEMENT

Sheet No.
C5.01

Xref (s): XBS2502197-50; XVS2502197-01; XCS2502197-10; XCS2502197-20; XCS2502197-25; XCS2502197-30

4/1/2026, NYYEN, \\BLCOMPANIES.COM\DFS\PROJ\DOES\2502\2502197\DWG\C2502197-50.DWG-LANDSCAPE PLAN ENLARGEMENT

© 2026 BL COMPANIES, INC. THESE DRAWINGS SHALL NOT BE UTILIZED BY ANY PERSON, FIRM OR CORPORATION WITHOUT THE SPECIFIC WRITTEN PERMISSION OF BL COMPANIES.

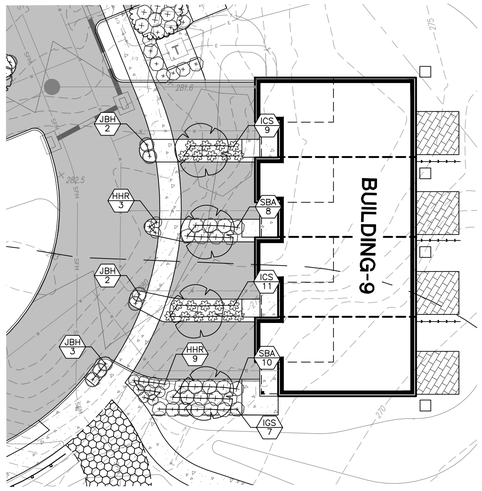

GRAPHIC SCALE
20 10 0 20
SCALE IN FEET

BUILDING 9 ENLARGEMENT

1"=20'

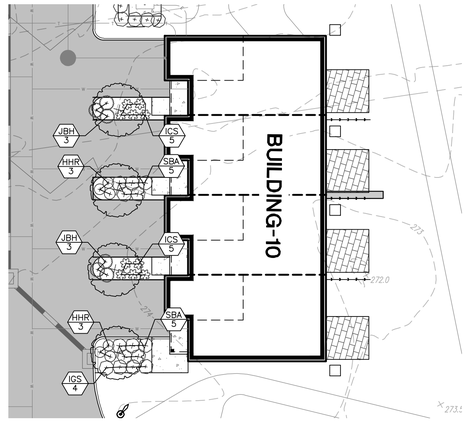

GRAPHIC SCALE
20 10 0 20
SCALE IN FEET

BUILDING 10 ENLARGEMENT

1"=20'

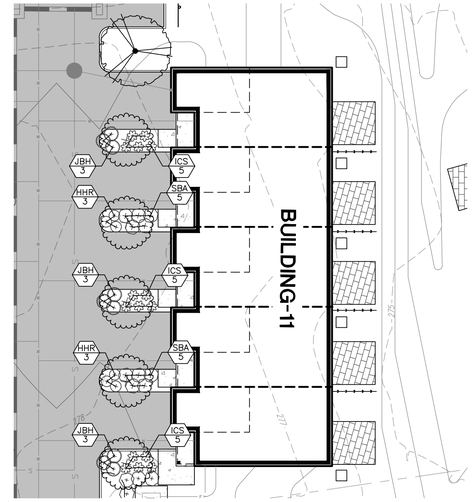

GRAPHIC SCALE
20 10 0 20
SCALE IN FEET

BUILDING 11 ENLARGEMENT

1"=20'

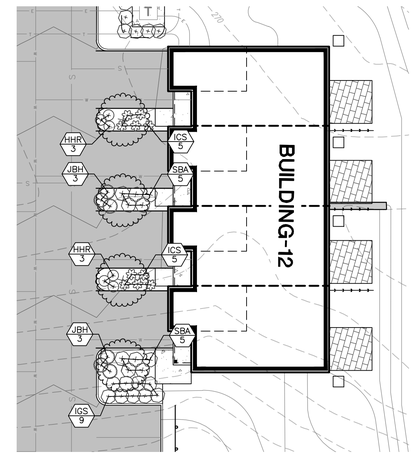

GRAPHIC SCALE
20 10 0 20
SCALE IN FEET

BUILDING 12 ENLARGEMENT

1"=20'

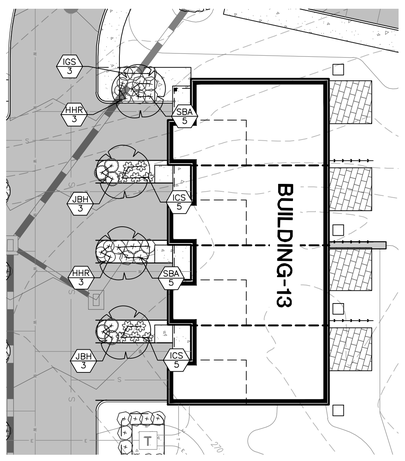

GRAPHIC SCALE
20 10 0 20
SCALE IN FEET

BUILDING 13 ENLARGEMENT

1"=20'

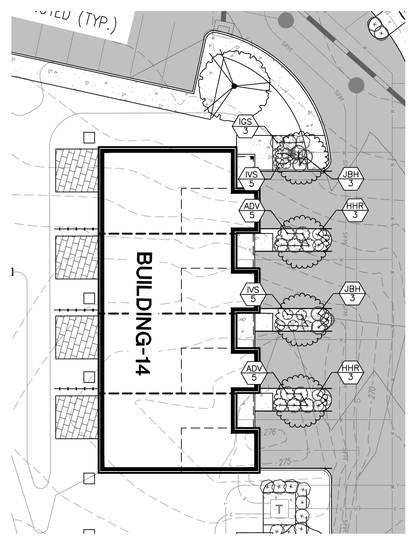

GRAPHIC SCALE
20 10 0 20
SCALE IN FEET

BUILDING 14 ENLARGEMENT

1"=20'

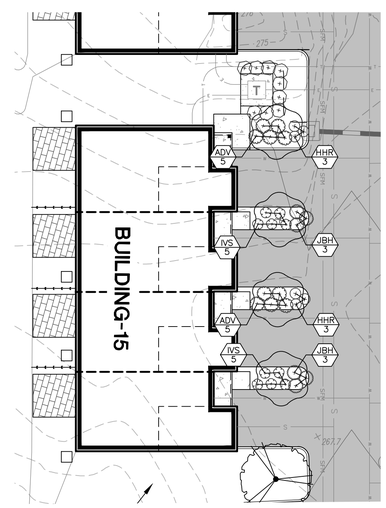

GRAPHIC SCALE
20 10 0 20
SCALE IN FEET

BUILDING 15 ENLARGEMENT

1"=20'

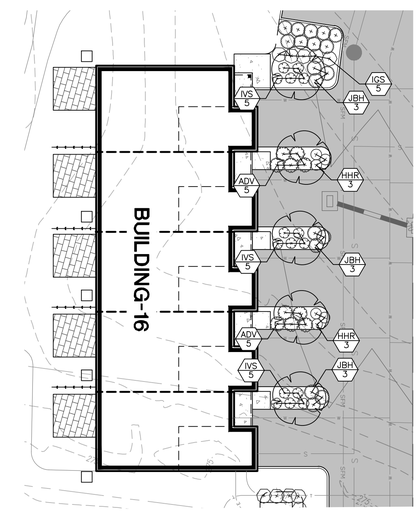

GRAPHIC SCALE
20 10 0 20
SCALE IN FEET

BUILDING 16 ENLARGEMENT

1"=20'

SEE SHEET C5.100 FOR LANDSCAPE NOTES AND DETAILS

SEE SHEET C5.00 FOR DETAILED PLANT SCHEDULE

FOR PERMITTING PURPOSES ONLY
NOT RELEASED FOR CONSTRUCTION

Architecture
Engineering
Environmental
Land Surveying
BL Companies
355 Research Parkway
Meriden, CT 06450
(203) 630-1406

STATE OF CONNECTICUT
NICHOLAS J. SCHUMACHER
33280
LICENSED
PROFESSIONAL ENGINEER

PROPOSED MULTI-FAMILY RESIDENTIAL DEVELOPMENT

1947 CENTER GROTON ROAD
LEDYARD, CT 06339

REVISIONS

No.	Date	Desc.

Designed	N.Y.Y.
Drawn	N.Y.Y.
Reviewed	D.J.C.
Scale	1"=20'
Project No.	2502197
Date	04/01/2026

CAD File: CZ502197-50

Title

LANDSCAPE PLAN ENLARGEMENT

Sheet No.

C5.02

Ref (s) : XREF(S)-50: XV502197-01 , XC2502197-10 , XC2502197-20 , XC2502197-25 , XC2502197-30

4/1/2026, NYYEN, \\BLCOMPANIES.COM\DFS\PROJ\2025\2502197\DWG\CZ502197-50.DWG-LANDSCAPE PLAN ENLARGEMENT.

© 2026 BL COMPANIES, INC. THESE DRAWINGS SHALL NOT BE UTILIZED BY ANY PERSON, FIRM OR CORPORATION WITHOUT THE SPECIFIC WRITTEN PERMISSION OF BL COMPANIES.

LANDSCAPE NOTES

1. THE LANDSCAPE PLAN AND DETAIL SHEET ARE FOR LANDSCAPING INFORMATION ONLY. REFER TO THE SITE PLAN, GRADING AND DRAINAGE PLAN, SITE UTILITIES PLAN, LIGHTING PLAN AND DEMOLITION PLAN FOR ALL OTHER INFORMATION.

2. COORDINATE PLANT MATERIAL LOCATIONS WITH SITE UTILITIES. UTILITY LOCATIONS SHOWN ON THE DRAWINGS ARE APPROXIMATE. EXERCISE CARE WHEN DIGGING IN AREAS OF POTENTIAL CONFLICT WITH UNDERGROUND OR OVERHEAD UTILITIES. THE CONTRACTOR IS RESPONSIBLE FOR ANY DAMAGE DUE TO CONTRACTOR'S NEGLIGENCE AND SHALL REPLACE OR REPAIR ANY DAMAGE AT CONTRACTOR'S EXPENSE. PRIOR TO DIGGING AND INSTALLATION OF PLANT MATERIAL, THE CONTRACTOR SHALL VERIFY ALL UTILITY SYSTEM LOCATIONS.

3. THE LOCATIONS FOR PLANT MATERIAL ARE APPROXIMATE AND ARE SUBJECT TO FIELD ADJUSTMENT DUE TO UTILITY LOCATIONS AND SITE CONDITIONS. THE CONTRACTOR SHALL ACCURATELY STAKE OUT THE LOCATIONS FOR ALL PLANTS FOR THE REVIEW, ADJUSTMENT, AND APPROVAL BY OWNER OR LANDSCAPE ARCHITECT PRIOR TO PLANTING.

4. THE CONTRACTOR SHALL GUARANTEE THAT ALL PLANTS SHALL BE HEALTHY AND FREE OF DISEASE FOR A PERIOD OF ONE YEAR OR JUNE 1ST OF THE YEAR FOLLOWING INSTALLATION, WHICHEVER IS LONGER, AFTER SUBSTANTIAL COMPLETION AND ACCEPTANCE BY OWNER OR LANDSCAPE ARCHITECT. CONTRACTOR SHALL REPLACE ANY DEAD OR UNHEALTHY PLANTS AT CONTRACTOR'S EXPENSE. PLANT MATERIAL REPLACEMENTS SHALL BE GUARANTEED FOR ONE FULL YEAR FROM DATE OF REPLACEMENT. REPLACEMENT PLANTS SHALL BE THE SAME AS SPECIFIED FOR THE ORIGINAL PLANTING. REPLACEMENTS SHALL BE MADE AS MANY TIMES AS NECESSARY TO ENSURE HEALTHY PLANTS. FINAL ACCEPTANCE SHALL BE MADE IF ALL PLANTS MEET THE GUARANTEE REQUIREMENTS INCLUDING MAINTENANCE. MAINTENANCE RESPONSIBILITIES INCLUDE CULTIVATING, SPRAYING, WEEDING, WATERING, TIGHTENING GUYS, PRUNING, FERTILIZING, MULCHING, AND ANY OTHER OPERATIONS NECESSARY TO MAINTAIN PLANT VIABILITY. MAINTENANCE SHALL BEGIN IMMEDIATELY AFTER PLANTING AND CONTINUE UNTIL THE END OF THE GUARANTEE PERIOD. DURING THE LANDSCAPE MAINTENANCE PERIOD (GUARANTEE) THE LANDSCAPE CONTRACTOR SHALL NOTIFY THE OWNER IN WRITING OF ANY SITE CONSTRAINTS (PHYSICAL, ENVIRONMENT, ETC.) OR MAINTENANCE DEFICIENCIES THAT MAY AFFECT LANDSCAPE VEGETATION ESTABLISHMENT.

5. THE CONTRACTOR SHALL SUPPLY ALL LABOR, PLANTS, AND MATERIALS IN QUANTITIES SUFFICIENT TO COMPLETE THE WORK SHOWN ON THE DRAWINGS AND LISTED IN THE PLANT SCHEDULE. IN THE EVENT OF A DISCREPANCY BETWEEN QUANTITIES SHOWN IN THE PLANT SCHEDULE AND THOSE REQUIRED BY THE DRAWINGS, THE LARGER SHALL APPLY. ALL PLANTS SHALL BE ACCLIMATED BY THE SUPPLY NURSERY TO THE LOCAL HARDINESS ZONE AND BE CERTIFIED THAT THE PLANTING MATERIAL HAS BEEN GROWN FOR A MINIMUM OF TWO YEARS AT THE SOURCE AND OBTAINED WITHIN 200 MILES OF PROJECT SITE UNLESS OTHERWISE APPROVED BY OWNER OR LANDSCAPE ARCHITECT.

6. PLANTS SHALL HAVE TAGS THAT IDENTIFY PLANT GENUS, SPECIES, CULTIVAR (IF APPLICABLE), PLANT COMMON NAME, NAME OF SOURCE NURSERY, AND SIZE OF PLANT FOR REVIEW OF OWNER OR LANDSCAPE ARCHITECT.

7. NO PLANT SHALL BE PLACED IN THE GROUND BEFORE ROUGH GRADING HAS BEEN COMPLETED AND APPROVED BY THE OWNER OR LANDSCAPE ARCHITECT. STAKING THE LOCATION OF ALL TREES AND SHRUBS SHALL BE COMPLETED PRIOR TO PLANTING FOR APPROVAL BY THE OWNER OR LANDSCAPE ARCHITECT.

8. FINAL GRADES SHALL BLEND SMOOTHLY WITH EXISTING GRADES, AND TOP AND BOTTOM OF SLOPES SHALL BE ROUNDED.

9. ALL TREE AND SHRUB MASSINGS SHALL BE MULCHED TO A DEPTH OF 3". ANNUAL AND PERENNIAL BEDS SHALL BE MULCHED TO A DEPTH OF 2". MULCH SHALL BE UNCOLORED TRIPLE-SHREDDED HARDWOOD BARK MULCH, AGED AT LEAST 6 MONTHS.

10. IF TREE STAKING IS PROPOSED, TREE STAKING MUST BE COMPLETED THE SAME DAY AS THE TREE IS INSTALLED. ALL TREES SHALL BE STAKED OR GUYED PER DETAIL.

11. LANDSCAPE PLANTING AREAS MUST BE FREE DRAINING. PAVEMENT, COMPACTED SUBGRADE, DEAD OR DYING PLANT MATERIAL, BLASTED ROCK, STONES GREATER THAN 1" IN DIAMETER, AND ANY OTHER MATERIAL HARMFUL TO PLANT GROWTH AND DEVELOPMENT SHALL BE REMOVED FROM AREAS TO BE LANDSCAPED AS REQUIRED BY PLANTING DETAILS OR SPECIFICATIONS.

12. PLANTING SOIL:

DEPTH: PLANTING SOIL SHALL BE INSTALLED AT A MINIMUM DEPTH OF 4" OR AS NOTED IN THE LANDSCAPE DETAILS. PLANTING SOIL SHALL BE UTILIZED IN ALL PLANTING AREAS INCLUDING SEEDED AREAS.

TESTING: CONTRACTOR SHALL SUBMIT (2) SOIL SAMPLES PER SOIL STOCKPILE TO A CERTIFIED TESTING LABORATORY TO DETERMINE ACIDITY, ORGANIC CONTENT, MECHANICAL ANALYSIS, AVAILABLE NUTRIENTS (N,P,K,Ca,Mg,S,Fe,Mn,Zn,Cu,B,Al,Pb) AND NECESSARY AMENDMENTS TO SOIL. THE CONTRACTOR SHALL SUBMIT THE TEST RESULTS TO THE OWNER OR LANDSCAPE ARCHITECT FOR REVIEW AND APPROVAL. TEST RESULTS SHALL RECOMMEND AMENDMENTS THAT WILL ALTER THE SOIL CHARACTERISTICS SUCH THAT THE CHARACTERISTICS DESCRIBED BELOW ARE ACHIEVED AND THE SPECIFIED PLANTS (CONTRACTOR TO PROVIDE LIST TO TESTING LABORATORY) WILL ACHIEVE PROPER GROWTH THAT IS NEITHER DEFICIENT NOR EXCESSIVE. THE CONTRACTOR SHALL INCORPORATE THESE AMENDMENTS AT NO INCREASE IN CONTRACT PRICE.

CHARACTERISTICS: PLANTING SOIL MAY CONSIST OF EXISTING ON-SITE SOILS, AMENDED ON-SITE SOILS, OR IMPORTED SOILS MEETING THE FOLLOWING CRITERIA:

A. NOT TO CONTAIN MATERIALS HARMFUL TO PLANT LIFE, TO BE CLEAN, FERTILE, FRIABLE, AND WELL DRAINING. ALL PLANTING SOIL SHALL BE FREE OF ANY SUBSOIL EARTH CLODS, SODS, STONES OVER 1" IN ANY DIMENSION, STICKS, ROOTS, WEEDS, LITTER AND OTHER DELETERIOUS MATERIAL. PLANTING SOIL SHALL BE UNIFORM IN QUALITY AND TEXTURE.
B. PLANTING SOIL SHALL HAVE THE FOLLOWING OPTIMUM RANGES UNLESS OTHERWISE APPROVED BY THE OWNER OR LANDSCAPE ARCHITECT.

ORGANIC CONTENT	3% – 6% FOR LAWN OR GRASS AREAS. 4% – 8% FOR TREE AND SHRUB PLANTERS. 8%–16% FOR RETENTION OR DETENTION BASINS.
(BY LOSS OF IGNITION AT 375 C METHOD OF TESTING)	
PH	6.0 – 7.3

C. NUTRIENT LEVELS SHALL BE ACHIEVED BY THE CONTRACTOR'S ADDITION OF AMENDMENTS TO THE PLANTING SOIL TO MEET THE OPTIMUM NUTRIENT LEVELS SPECIFIED IN THE TESTING LABORATORY REPORT FOR EACH OF PLANTS TO BE INSTALLED.
D. SOIL SHALL BE COMPACTED TO A SURFACE PENETRATION RESISTANCE OF 75–125 LBS/SQ.IN.
E. SOIL MAY BE TREATED FOR WEEDS WITH PRE-EMERGENT OR POST-EMERGENT HERBICIDE, AS NEEDED AND AS APPROPRIATE FOR THE APPLICATION SEASON OR LOCATION, OR ELIMINATE GROWTH OF UNWANTED PLANT MATERIAL. APPLY HERBICIDES IN ACCORDANCE WITH MANUFACTURERS RECOMMENDATIONS. HERBICIDE APPLICATOR MUST BE LICENSED IN THE STATE OF CONNECTICUT, AND PERFORM APPLICATIONS IN ACCORDANCE WITH LOCAL REQUIREMENTS, PERMITTING STIPULATIONS, AND ANY OTHER RESTRICTIONS INCLUDING AND IN EXCESS OF STATE AND FEDERAL REGULATIONS.
F. PROPOSED TOPSOIL SHALL MEET THE USDA SOILS TEXTURAL PERCENTAGES OF SAND, SILT, AND CLAY FOR FOLLOWING CLASSIFICATIONS:
   - LOAM
   - SANDY LOAM WHERE SAND DOES NOT EXCEED 70% AND CLAY IS NOT LESS THAN 5%.
   - SANDY CLAY LOAM WHERE SAND DOES NOT EXCEED 70% AND CLAY IS LESS THAN 28%.
G. BIORETENTION SOILS: SOIL TO BE INSTALLED IN RETENTION BASINS, PONDS, OR OTHER STORMWATER MANAGEMENT ENVIRONS SHALL MEET THE ABOVE DESCRIBED CHARACTERISTICS AND AS FOLLOWS:
   - SOIL SHALL NOT CONTAIN MORE THAN 20% CLAY AND LESS THAN 40% SILT.
   - SOIL SHALL HAVE AN INFILTRATION RATE BETWEEN 1/2" AND 3" PER HOUR.
H. MODIFICATION TO THE PLANTING SOIL CHARACTERISTICS DESCRIBED ABOVE MAY BE SUBMITTED FOR APPROVAL BY THE LANDSCAPE ARCHITECT. CONTRACTOR MUST DEMONSTRATE PROPOSED CHARACTERISTICS ARE EQUAL TO OR SUPERIOR TO THE SPECIFIED CHARACTERISTICS WITH RESPECT TO SUPPORTING PLANT GROWTH, AND STORMWATER MANAGEMENT.

12. PLANTING AMENDMENTS:
APPLY FERTILIZER AND OTHER AMENDMENTS AS RECOMMENDED FOR EACH PLANTING AREA BY SOIL ANALYSIS. APPLY AMENDMENTS IN A MANNER CONSISTENT WITH MANUFACTURER'S RECOMMENDATIONS. ANY ORGANIC AMENDMENTS SHALL HAVE A pH BETWEEN 4.5 AND 5.5 UNLESS OTHERWISE RECOMMENDED.

13. PLANT REQUIREMENTS: ALL PLANTS SHALL CONFORM IN SIZE AND GRADE TO THE AMERICAN STANDARD FOR NURSERY STOCK, ANSI Z60.1 (LATEST EDITION). ALL PLANTS SHALL MEET THE ADDITIONAL REQUIREMENTS SET FORTH BELOW AND IN WRITTEN SPECIFICATIONS AS APPLICABLE. ALL TREES AND SHRUBS SHALL HAVE BEEN GROWN AT A COMMERCIAL NURSERY WITHIN 200 MILES OF THE PROJECT SITE UNLESS OTHERWISE APPROVED BY OWNER OR LANDSCAPE ARCHITECT. THEY SHALL BE TYPICAL OF THEIR SPECIES OR VARIETY. THEY SHALL BE HEALTHY, SYMMETRICAL, EVENLY AND DENSELY BRANCHED, AND DENSELY FOLIATED WHEN IN LEAF. THEY SHALL BE FREE OF BARK INJURY, DISEASE, AND INSECT PESTS. ALL TREES SHALL HAVE A STRAIGHT TRUNK WITH A SINGLE MAIN LEADER UNLESS OTHERWISE CHARACTERISTIC OF THE SPECIES OR VARIETY. THE OWNER OR LANDSCAPE ARCHITECT WILL ALLOW SUBSTITUTIONS ONLY UPON WRITTEN APPROVAL. SIZES SHALL CONFORM TO THE MEASUREMENT SPECIFIED ON THE DRAWINGS. PLANTS LARGER THAN SPECIFIED MAY BE USED IF APPROVED, BUT THE USE OF SUCH PLANTS SHALL NOT INCREASE THE CONTRACT PRICE. ALL OVERSTORY TREES PLANTED ALONG PARKING AREAS, SIDEWALKS AND PEDESTRIAN ACCESSES SHALL NOT BRANCH BELOW 7' FEET IF THE TREE CALIPER IS 3" INCHES OR GREATER. ALL PLANT MATERIALS ARE SUBJECT TO INSPECTION AND ACCEPTANCE BY THE OWNER OR LANDSCAPE ARCHITECT AT THE NURSERY SOURCE. THE CONTRACTOR SHALL COORDINATE SOURCE VISITS WITH THE LANDSCAPE ARCHITECT AND SHALL ACCOMPANY THE OWNER AND/OR LANDSCAPE ARCHITECT FOR ALL INSPECTIONS. CERTIFICATES OF COMPLIANCE WITH SPECIFICATIONS ARE REQUIRED FOR ALL PLANTS.

14. INSPECTION AND REVIEW:
ALL PLANT MATERIAL SHALL BE SUBJECT TO INSPECTION AND ACCEPTANCE BY THE OWNER OR LANDSCAPE ARCHITECT AT THE NURSERY SOURCE OR PLACE OF GROWTH. THE CONTRACTOR SHALL COORDINATE WITH THE LANDSCAPE ARCHITECT ON A SCHEDULE FOR SOURCE VISITS AND ACCOMPANY THE OWNER OR LANDSCAPE ARCHITECT FOR ALL SOURCE INSPECTIONS. CERTIFICATES OF COMPLIANCE ARE REQUIRED FOR ALL PLANT MATERIALS.
PHOTOGRAPHIC REVIEW OF PLANT MATERIAL IS ACCEPTABLE IF APPROVED BY LANDSCAPE ARCHITECT. PHOTOGRAPHS MUST BE PROVIDED IN QUANTITY AND VARIETY TO ALLOW LANDSCAPE ARCHITECT SUFFICIENT INFORMATION TO MAKE A REASONABLE DETERMINATION AS TO THE PLANTS' QUALITY. OWNER AND LANDSCAPE ARCHITECT RESERVES THE RIGHT TO REJECT PLANT MATERIAL DELIVERED TO THE SITE BUT PREVIOUSLY ACCEPTED IF DAMAGED OR NOT PROPERLY MAINTAINED DURING THE DELIVERY PROCESS.

15. PLANTING SEASONS (UNLESS OTHERWISE APPROVED BY THE OWNER OR LANDSCAPE ARCHITECT)

	SPRING	FALL
PLATNINGS	APRIL 1 TO JUNE 15	SEPTEMBER 1 TO OCTOBER 15
SEED MIXES	PER MANUFACTURERS RECOMMENDATIONS OR AS LISTED IN SEED MIX NOTES	

16. SEEDING MIXTURES: REFER TO SEED MIX NOTES.
SEEDED AREA SHALL BE ACCEPTED WHEN SEED AREA ACHIEVES 90% COVERAGE.

17. ALL SLOPES STEEPER THAN 3:1 RECEIVING A SEED MIX SHALL BE COVERED WITH AN EROSION CONTROL BLANKET OF STRAW FIBER AND BIODEGRADABLE OR PHOTODEGRADABLE NETTING.

18. UNLESS OTHERWISE NOTED IN DRAWING SET, NEW TREELINES SHALL EQUAL CLEARING AND GRUBBING LIMIT FOR CONSTRUCTION.

19. ALL DISTURBED AREAS NOT OTHERWISE DEVELOPED SHALL BE SEEDED WITH THE LAWN SEED MIX.

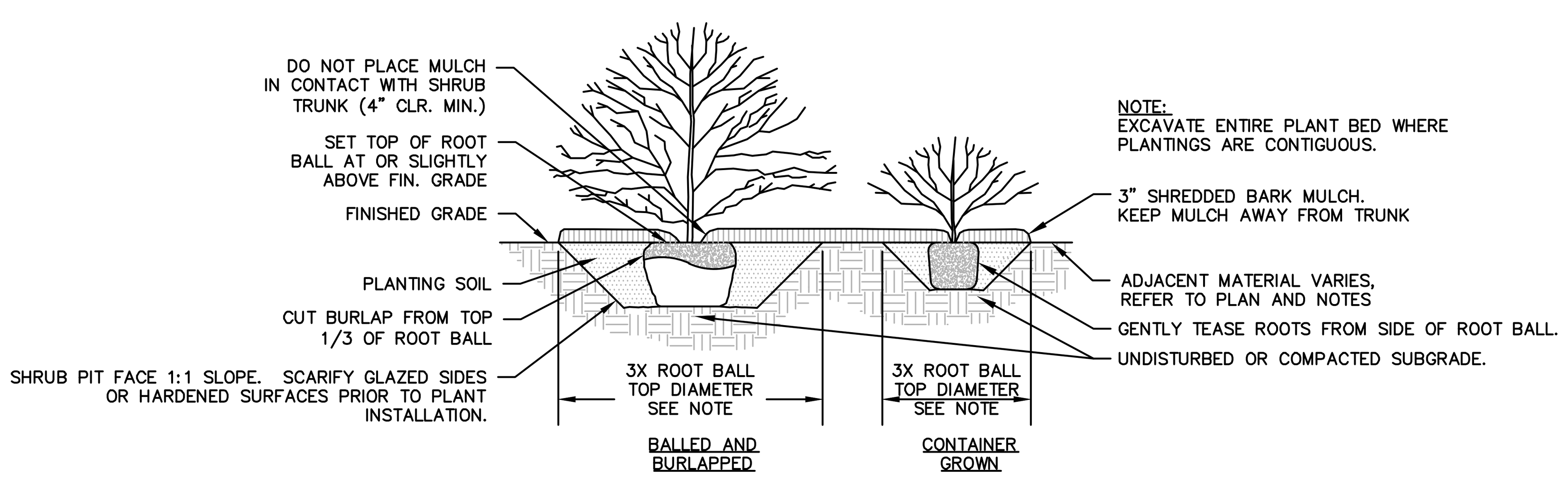

SHRUB PLANTING

N.T.S

SEED MIX NOTES

A. LAWN SEEDING MIX:
15 % PERENNIAL RYEGRASS (BLEND OF 3 IMPROVED HYBRIDS)
25 % FINE LEAF OR CREEPING FESCUE (BLEND OF 3 IMPROVED HYBRIDS)
60 % KENTUCKY BLUEGRASS (BLEND OF 3 IMPROVED HYBRIDS)
SEEDING RATE: 5 LBS/1,000 S.F.
SEEDING DATES: AUGUST 15 – OCTOBER 1 AND APRIL 15 – JUNE 30 UNLESS OTHERWISE APPROVED BY THE OWNER OR LANDSCAPE ARCHITECT.

B. CONSERVATION SEED MIX –
NEW ENGLAND CONSERVATION/WILDLIFE MIX
NEW ENGLAND WETLAND PLANTS INC. OR APPROVED EQUAL

SPECIES: VIRGINIA WILD RYE (ELYMUS VIRGINICUS), LITTLE BLUESTEM (SCHIZACHYRIUM SCOPARIUM), BIG BLUESTEM (ANDROPOGON GERARDII), CREEPING RED FESCUE (FESTUCA RUBRA), SWITCH GRASS (PANICUM VIRGATUM), PARTRIDGE PEA (CHAMAECRISTA FASCICULATA), PANICLEDLEAD TICK TREFOIL (DESMODIUM PANICULATUM), INDIAN GRASS, (SORGHASTRUM NUTANS), BLUE VERVAIN (VERBENA HASTATA), BUTTERFLY MILKWEED (ASCLEPIAS TUBEROSA), BLACK EYE SUSAN (RUDBECKIA HIRTA), COMMON SNEEZEWEED (HELENIUM AUTUNALE), HEATH ASTER (ASTERPILOSUS/SYMPHYOTRICHUM PILOSUM), EARLY GOLDENROD (SOLIDAGO JUNCEA), UPLAND BENTGRASS (AGROSTIS PERENNANS).

APPLICATION RATE: 25 LBS/ ACRE (1 LB PER 1,750 SF)
SEEDING DATES: AUGUST 15 – OCTOBER 1 AND APRIL 15 – JUNE 30
UNLESS OTHERWISE APPROVED BY THE OWNER OR LANDSCAPE ARCHITECT.

C. DETENTION BASIN RESTORATION MIX–
NEW ENGLAND EROSION CONTROL/RESTORATION MIX FOR DETENTION BASIN AND MOIST SITES
NEW ENGLAND WETLAND PLANTS INC. OR APPROVED EQUAL

SPECIES:
RIVER BANK WILD RYE (ELYMUS RIPARIOUS), CREEPING RED FESCUE (FESTUCA RUBRA), LITTLE BLUESTEM (SCHIZACHYRIUM SCOPARIUM), BIG BLUESTEM (ANDROPOGON GERARDII), SWITCH GRASS (PANICUM VIRGATUM), UPLAND BENTGRASS (AGROSTIS PERENNANS), NODDING BUR MARIGOLD (BIDENS CERNUA), BLUE VERVAIN (VERBENA HASTATA), HOLLOW-STEM JOE PYE WEED (EUPATORIUM FISTULOSUM), NEW ENGLAND ASTER (ASTER NOVAEANGLIAE), BONESET (EUPARTORIUM PERFOLIATUM), SOFT RUSH (JUNCUS EFFUSUS), WOOL GRASS (SCIRPUS CYPERINUS).

APPLICATION RATE: 35 LBS/ACRE: 1250 SQ FT/LB
SEEDING DATES: AUGUST 15 – OCTOBER 1 AND APRIL 15 – JUNE 30
UNLESS OTHERWISE APPROVED BY THE OWNER OR LANDSCAPE ARCHITECT.

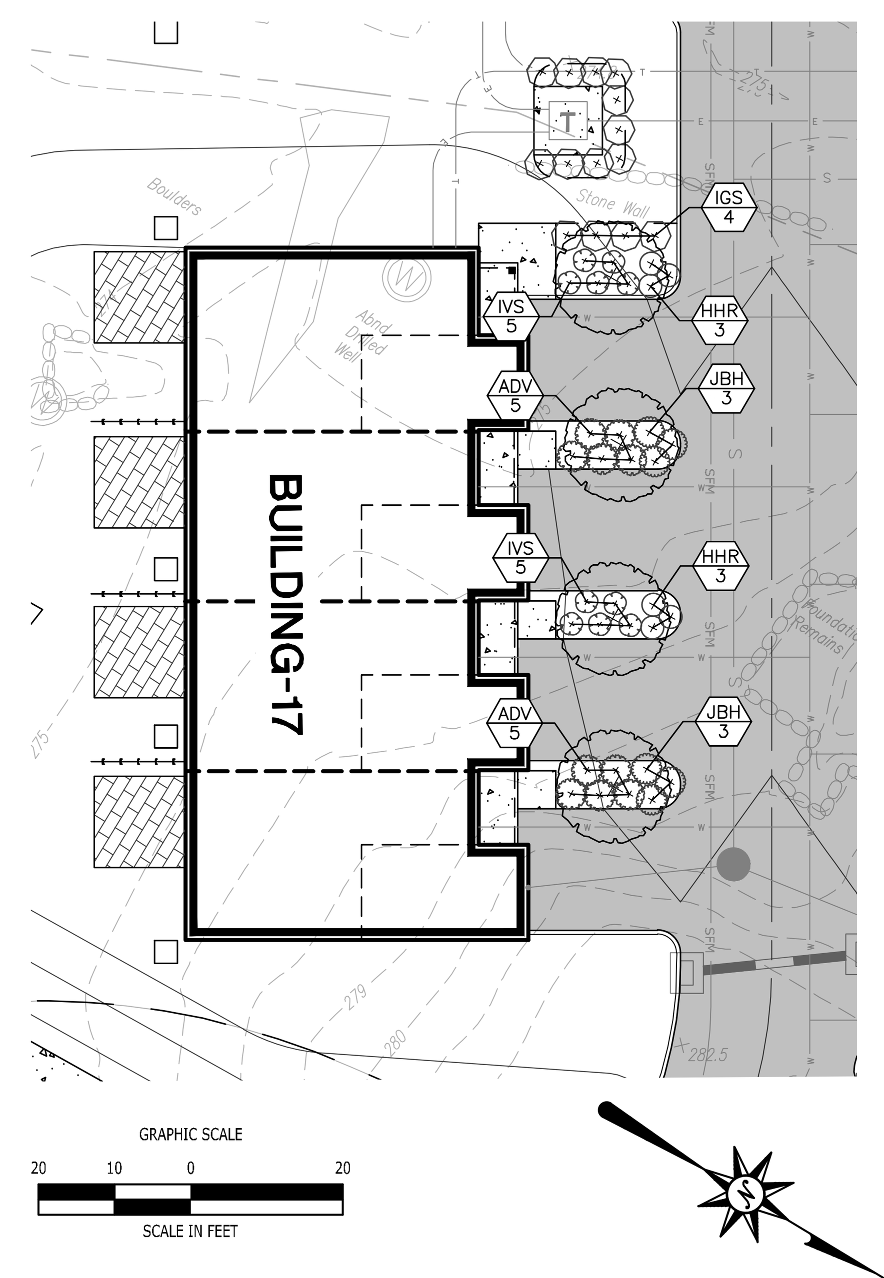

BUILDING 17 ENLARGEMENT

1"=20'

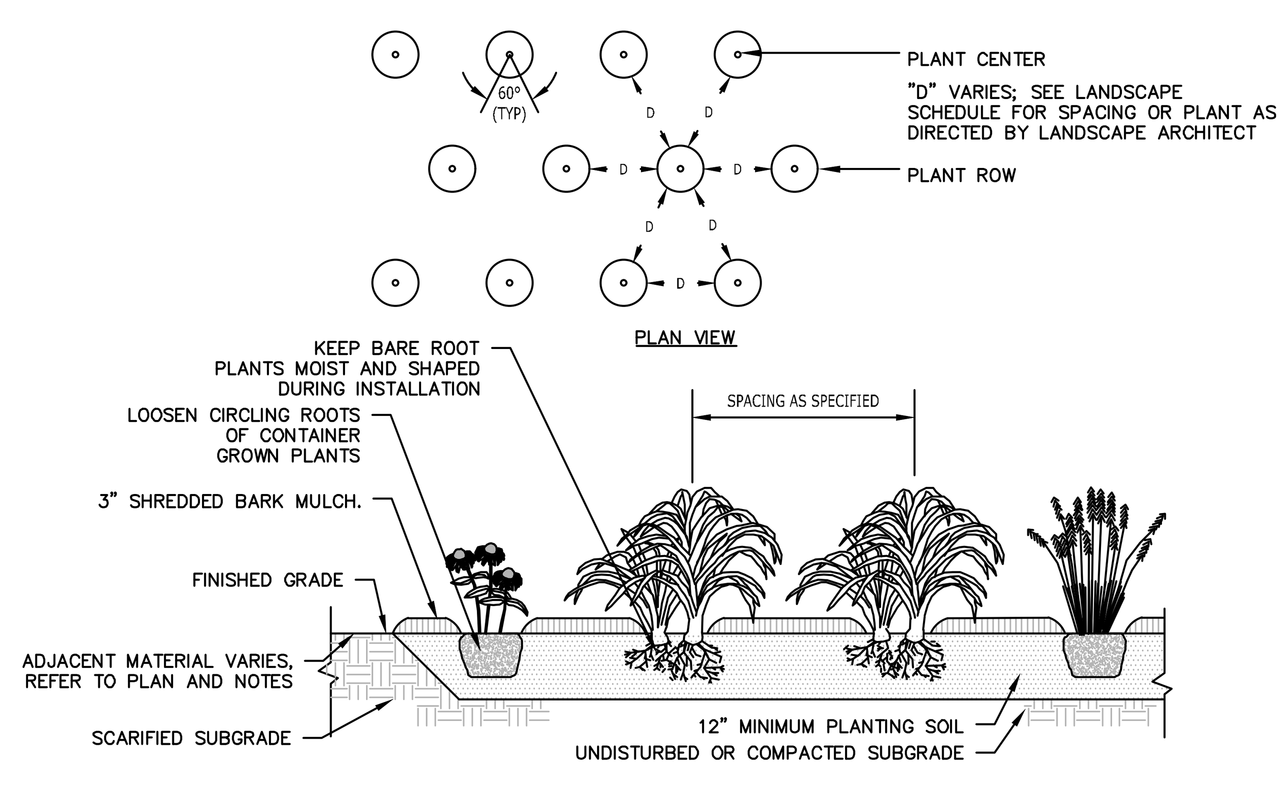

GROUNDCOVER PLANTING

N.T.S

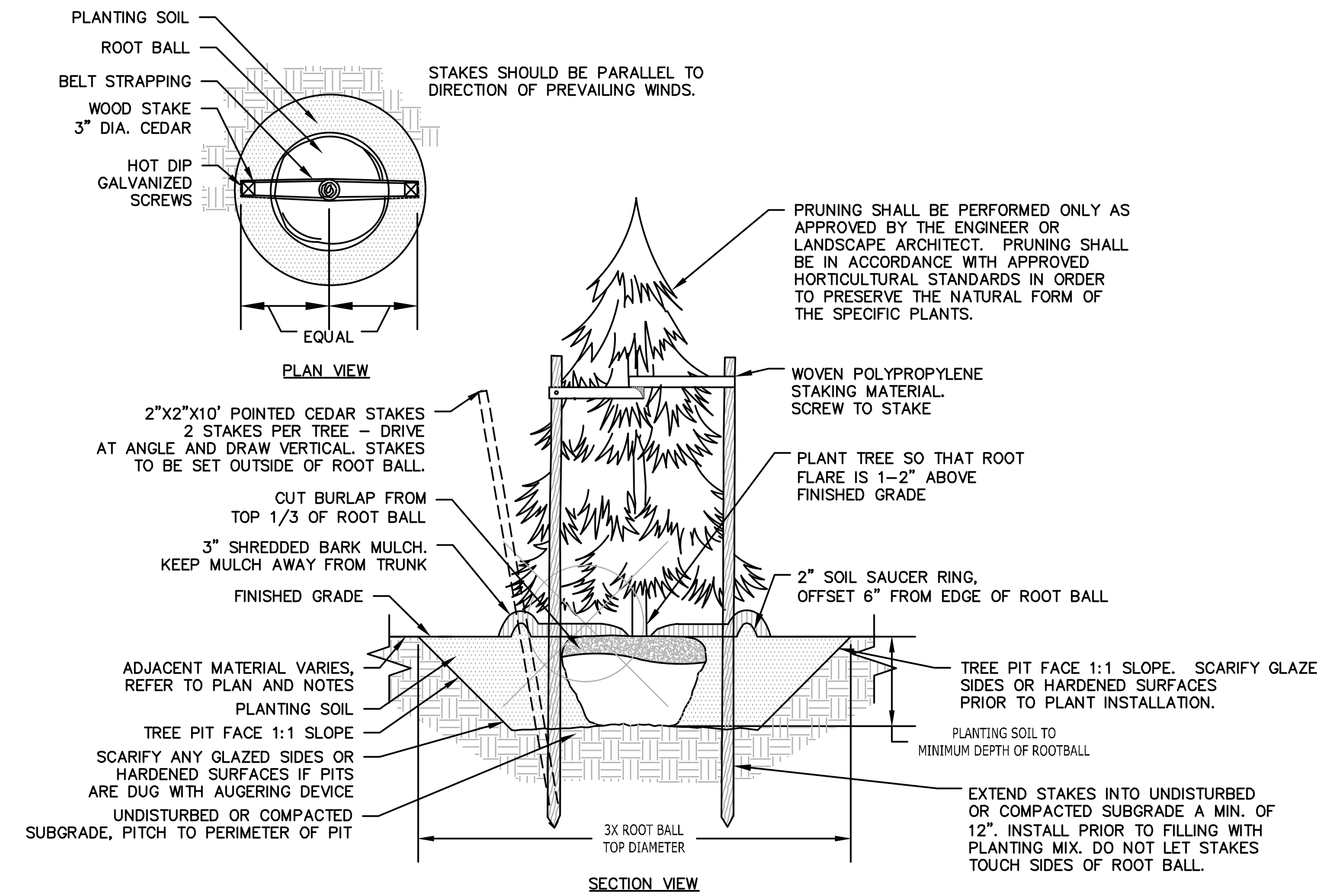

NOTES:
1. STAKING FOR TREES ON 4:1 SLOPES OR LESS TO BE PERFORMED AT CONTRACTOR'S DISCRETION.
2. WOVEN POLYPROPYLENE STAKING MATERIAL SHALL BE DEEPROOT ARBORTIE (GREEN) OR APPROVED EQUIVALENT. MATERIAL SHALL BE LOOPED AROUND TREE THROUGH EACH OTHER, TWISTED, AND SECURED TO THE STAKE. INSTALL SPECIFIED MATERIAL IN ACCORDANCE WITH MANUFACTURER'S DIRECTIONS.
3. BEFORE IN HOLE, REMOVE BOTTOM OF CAGE. ONCE IN HOLE, REMOVE REST OF CAGE FROM ROOT BALL. REMOVE TWINE AND BURLAP FROM TOP 1/3 OF ROOT BALL – SCORE REMAINING 2/3 OF BURLAP. IF BURLAP IS SYNTHETIC OR HAS BEEN TREATED WITH ANTI-DESICCANT, COMPLETELY REMOVE IT FROM ROOT BALL.

EVERGREEN TREE PLANTING

N.T.S

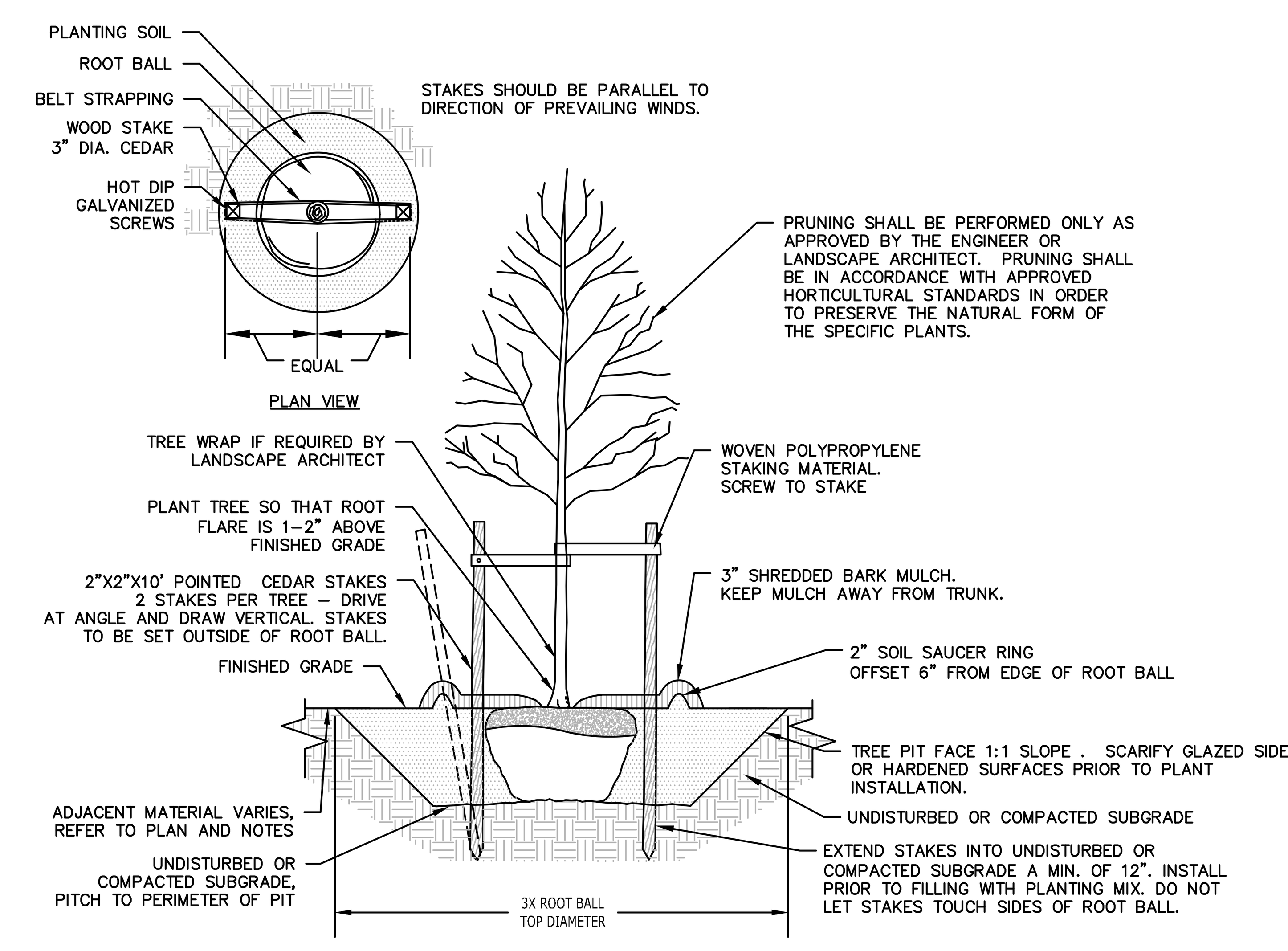

NOTES:
1. STAKING FOR TREES ON 4:1 SLOPES OR LESS THAN 3" CALIPER TO BE PERFORMED AT CONTRACTORS DISCRETION.
2. WOVEN POLYPROPYLENE STAKING MATERIAL SHALL BE DEEPROOT ARBORTIE (GREEN) OR APPROVED EQUIVALENT. MATERIAL SHALL BE LOOPED AROUND TREE THROUGH EACH OTHER, TWISTED, AND SECURED TO THE STAKE. INSTALL SPECIFIED MATERIAL IN ACCORDANCE WITH MANUFACTURER'S DIRECTIONS.
3. BEFORE IN HOLE, REMOVE BOTTOM OF CAGE. ONCE IN HOLE, REMOVE REST OF CAGE FROM ROOT BALL. REMOVE TWINE AND BURLAP FROM TOP 1/3 OF ROOT BALL – SCORE REMAINING 2/3 OF BURLAP. IF BURLAP IS SYNTHETIC OR HAS BEEN TREATED WITH ANTI-DESICCANT, COMPLETELY REMOVE IT FROM ROOT BALL.

DECIDUOUS TREE PLANTING

N.T.S

SEE SHEET C5.00 FOR DETAILED PLANT SCHEDULE

FOR PERMITTING PURPOSES ONLY
NOT RELEASED FOR CONSTRUCTION

BL Companies
Architecture
Engineering
Environmental
Land Surveying
355 Research Parkway
Meriden, CT 06450
(203) 630-1406

STATE OF CONNECTICUT · AARON D. SCHUMACHER · 33269 · LICENSED PROFESSIONAL ENGINEER

PROPOSED MULTI-FAMILY RESIDENTIAL DEVELOPMENT
1947 CENTER GROTON ROAD
LEDYARD, CT 06339

REVISIONS

No.	Date	Desc.

Designed	N.Y.Y.
Drawn	N.Y.Y.
Reviewed	D.J.C.
Scale	NONE
Project No.	2502197
Date	04/01/2026
CAD File:	C2502197-50

Title
LANDSCAPING NOTES AND DETAILS

Sheet No.
C5.100

Xref (s): ; XB2502197-00 ; XY2502197O1 ; XC2502197-10 ; XC2502197-20 ; XL2502197-10 ; XC2502197-25 ; XC2502197-30

4/1/2026, NYUEN, \\BLCOMPANIES.COM\DFS\PROJ\JOBS25\20\2502197\DWG\C2502197-50.DWG,LANDSCAPING NOTES AND DETAILS.

© 2026 BL COMPANIES, INC. THESE DRAWINGS SHALL NOT BE UTILIZED BY ANY PERSON, FIRM OR CORPORATION WITHOUT THE SPECIFIC WRITTEN PERMISSION OF BL COMPANIES.

Image									
Symbol	Label	QTY	Manufacturer	Catalog	Description	Lamp Output	LLF	Input Power	Distribution
	SL3WH	21	SIGNIFY HADCO	TVLN-32-G1-1-3WH-730	TownView (TVLN), 32 LED's, 3000K CCT, TYPE 3WH OPTIC, with No Panels and House-side Shield	8285	0.9	108.4	B1-U0-G2

Statistics						
Description	Symbol	Avg	Max	Min	Max/Min	Avg/Min
SITE/LANDSCAPE		0.2 fc	4.8 fc	0.0 fc	N/A	N/A
SPILL		0.0 fc	0.5 fc	0.0 fc	N/A	N/A
VEHICLE PATH		1.8 fc	4.6 fc	0.2 fc	23.0:1	9.0:1
PARKING		2.0 fc	4.6 fc	0.4 fc	11.5:1	5.0:1

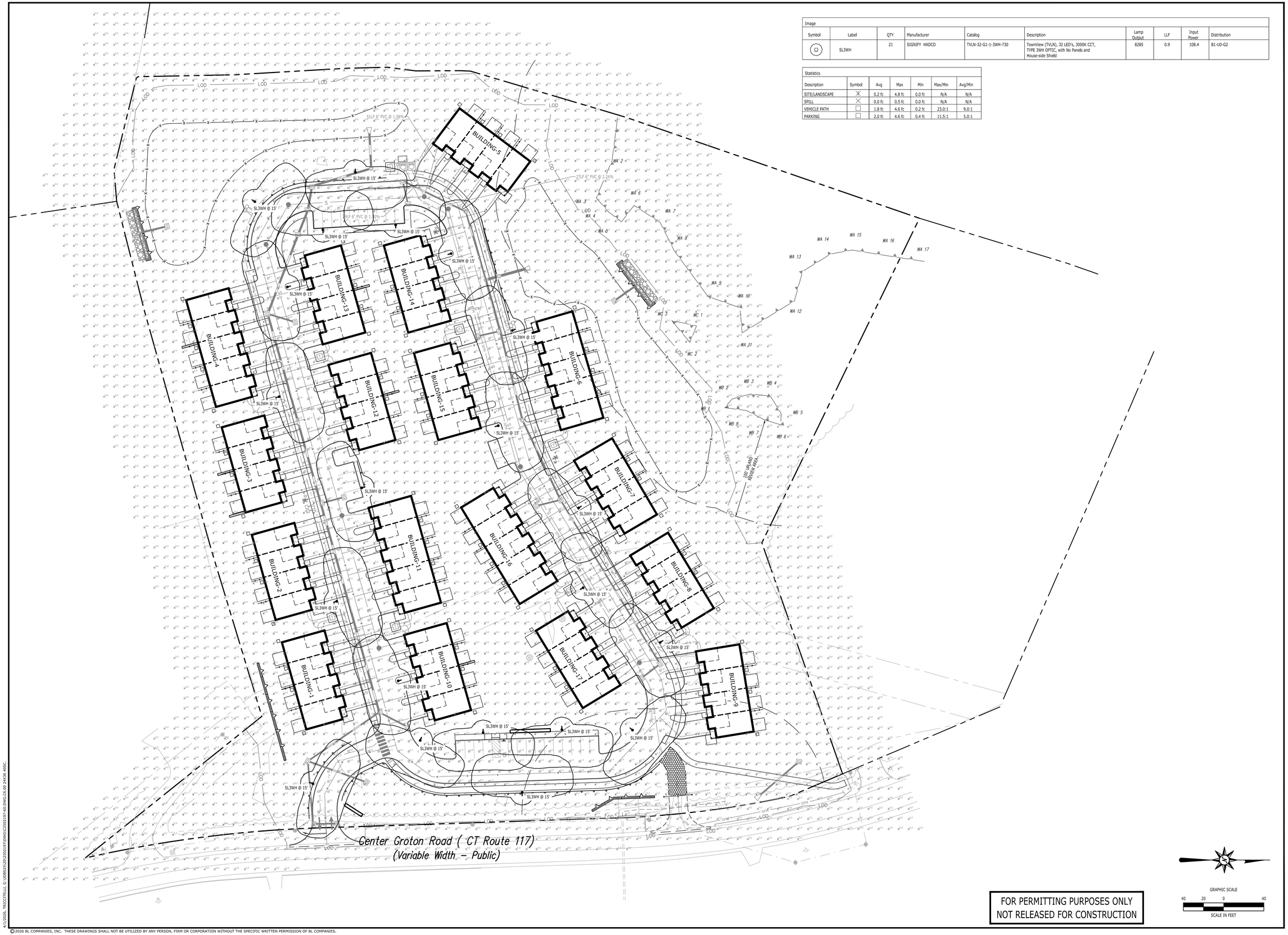

FOR PERMITTING PURPOSES ONLY
NOT RELEASED FOR CONSTRUCTION

GRAPHIC SCALE
40 20 0 40
SCALE IN FEET

Architecture
Engineering
Environmental
Land Surveying
BL Companies
355 Research Parkway
Meriden, CT 06450
(203) 630-1406

STATE OF CONNECTICUT
JOHN S. SCHUMANN
33260
LICENSED PROFESSIONAL ENGINEER

PROPOSED MULTI-FAMILY RESIDENTIAL DEVELOPMENT
1947 CENTER GROTON ROAD
LEDYARD, CT 06339

REVISIONS		
No.	Date	Desc.

Designed	J.S.D.
Drawn	J.S.D.
Reviewed	R.M.R.
Scale	1"=40'
Project No.	2502197
Date	04/01/2026
CAD File: C2502197-60	

Title
LIGHTING PLAN

Sheet No.
C6.00

Xref (s) : X82502197-00 ; XC2502197-01 ; XC2502197-30 ; XC2502197-60 ; XC2502197-25

4/1/2026, TRICCITELLO, G:\JOBS25\20\2502197\DWG\C2502197-60.DWG,C6.00 24X36 40SC.

©2026 BL COMPANIES, INC. THESE DRAWINGS SHALL NOT BE UTILIZED BY ANY PERSON, FIRM OR CORPORATION WITHOUT THE SPECIFIC WRITTEN PERMISSION OF BL COMPANIES.

LIGHTING NOTES

1. ALL WORK SHALL BE DONE IN STRICT ACCORDANCE WITH ALL REQUIREMENTS OF ANY LOCAL APPLICABLE CODES OR ORDINANCES, PUBLIC UTILITY COMPANY REGULATIONS, STATE CODE, AND NATIONAL ELECTRICAL CODE WITH INTERIM AMENDMENTS THERETO.

2. ALL MATERIALS SHALL CONFORM TO THE LATEST ISSUE OF ALL APPLICABLE STANDARDS AS ESTABLISHED BY EEI, NEMA, ASTM, IPCEA, NATIONAL BOARD OF FIRE UNDERWRITERS, AND UNDERWRITERS LABORATORIES, INC.

3. THE CONTRACTOR SHALL TEST THE LIGHTING AFTER INSTALLATION WITH THE DEVELOPER/OWNER, AND PROVIDE TO DEVELOPER/OWNER WARRANTY AND MAINTENANCE INFORMAITON. THE CONTRACTOR SHALL MAKE ADJUSTMENTS AND/OR MODIFICATIONS AS REQUIRED BY THE DEVELOPER/OWNER TO OBTAIN EVEN LIGHT DISTRIBUTION.

4. CONTRACTOR SHALL LEAVE ENTIRE ELECTRICAL SYSTEM INSTALLED BY THE CONTRACTOR IN PROPER WORKING CONDITION AND REPLACE WITHOUT ADDITIONAL CHARGE ALL WORK OR MATERIALS WHICH MAY DEVELOP DEFECTS WITHIN A PERIOD OF ONE (1) YEAR FROM DATE OF FINAL ACCEPTANCE BY THE OWNER.

5. THE CONTRACTOR SHALL SUBMIT SHOP DRAWINGS OF ALL PRODUCTS, BASES AND CONDUITS TO SITE ENGINEER FOR REVIEW AND APPROVAL PRIOR TO DELIVERY OF MATERIAL TO SITE. ALLOW A MINIMUM OF 14 WORKING DAYS FOR REVIEW. IF ALTERNATIVE LIGHTING IS PROPOSED SUBMIT A PHOTOMETRIC FOOT-CANDLE LAYOUT ALONG WITH ANNUAL MAINTENANCE REQUIREMENTS AND ANTICIPATED COSTS.

6. LIGHTS ARE DESIGNED TO PROVIDE EVEN LEVELS OF ILLUMINATION AND AVOID GLARE ONTO NEIGHBORING PROPERTIES. FINAL DESIGN MAY VARY PENDING MANUFACTURER'S RECOMMENDATIONS.

7. ALL LIGHTING CONTROLS, PANELS, CIRCUIT BREAKERS ETC. ARE TO BE PROVIDED UNDER A SEPARATE CONTRACT BY BUILDING CONTRACTOR. CAREFUL COORDINATION IS REQUIRED BETWEEN SITE CONTRACTOR AND BUILDING CONTRACTOR TO PROVIDE A COMPLETE INSTALLATION FOR SITE LIGHTING.

8. THE CONTRACTOR WILL PROVIDE AND INSTALL ALL MATERIAL NECESSARY TO COMPLETE THE SITE LIGHTING SYSTEM INCLUDING BUT NOT LIMITED TO CONDUIT, BASES, ANCHOR BOLTS, POLES, SITE LIGHTS AND LAMPS. THE CONTRACTOR WILL COORDINATE WIRING AND POWERING OF LIGHTS WITH OWNER, ARCHITECT, AND BUILDING CONTRACTOR IF DIFFERENT FROM THE SITE CONTRACTOR.

9. ALL LIGHTS TO BE AS LISTED IN SCHEDULE OR APPROVED EQUIVALENT. LIGHTS SHALL BE MOUNTED ON SQUARE STRAIGHT STEEL POLES ATOP CONCRETE BASES THAT ARE SET 3' (CLEAR) BEHIND CURBS UNLESS OTHERWISE INDICATED ON CONTRACT DRAWINGS. ILLUMINATION ANALYSIS MODELED USING LIGHTING FIXTURES LISTED IN SCHEDULE.

10. LIGHT POLES AND BRACKETS TO BE AS SHOWN ON DETAILS OR APPROVED EQUIVALENT.

11. WIRE AND CABLE SHALL BE COPPER AND CONFORM TO THE FOLLOWING NEC TYPE THHN/THWN SOLID FOR NO. 12 AND NO. 10. NEC TYPE THHN/THWN STRANDED FOR NO. 8 AND LARGER. RIGID STEEL CONDUIT SHALL BE GALVANIZED. FITTINGS SHALL BE CAST FERROUS MATERIAL WITH A CADMIUM OR ZINC PLATED FINISH.

12. ALL EQUIPMENT SHALL BE GROUNDED AND BONDED IN ACCORDANCE TO NEC.

13. ANY POLES THAT ARE NOT LOCATED ON INACCESSIBLE OR LANDSCAPED AREAS MUST BE PAINTED SAFETY YELLOW AT THE LIGHT POLE BASE. LIGHT POSTS SHALL BE ALIGNED WITH PARKING STRIPES.

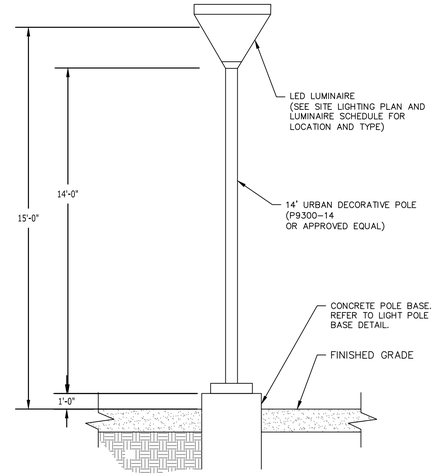

LUMINAIRE MOUNTING DETAIL

N.T.S

HADCO

Urban

TownView

TVLC/TVLN
Post top and arm mount luminaire

Hadco TownView LED post top luminaires were designed to eliminate the compromises of performance, comfort, style options and value when choosing the right lighting solution for residential street and pedestrian area. The horizontal lens option reduces glare to enhance a sense of security with increased visual comfort. TownView offers design flexibility with a variety of style options, lumen packages, a range of control options and more at exceptional value.

Project:
Location:
Cat.No:
Type:
Lamps: Qty:
Notes:

Ordering guide: Luminaire

Example: TVLN-S3-S-16-G1-S-2S-740-A-ZD4I-R7-N-SP1-T-N-B-BK

Series	Mounting	Roof option	LED module	Generation	Drive current	Distribution	Color temp.	Voltage	Integral Control Options (pick only one) (0-10V dimming driver standard)
TVLN TownView with no lens **TVLC** TownView with comfort lens	**A** [1,2] Arm Mt **L4** Large Post Top Fitter 4" (tool less entry) **L3** Large Post Top Fitter 3" (tool less entry) **S2** Small Post Fitter 2-3/8" **S3** Small Post Fitter 3" **S4** Small Post Fitter 4"	**S** Square Roof **C** [1] Curved Roof	**16** 16 LEDs **32** 32 LEDs **48** 48 LEDs	**G1** Gen 1 **G1** Gen 1 **G1** Gen 1	**5** 530 mA **7** 700 mA **9** 900 mA **1** 1050 mA **5** 530 mA **7** 700 mA **8** 800 mA **1** 1050 mA **5** 530 mA **7** 700 mA	**2SH** Type 2 Short House-side shield **2S** Type 2 Short **3S** Type 3 Short **3SH** Type 3 Short House-side shield **3W** Type 3 Wide **3WH** Type 3 Wide House-side shield **5** Type 5	**730** [3] 3000K, 70 CRI **740** 4000K, 70 CRI **827** [3,8] 2700K, 80 CRI	**A** 120-277V **J** [4] 480V **K** [4] 347V	**D4ID** [4] D4i certified DALI driver **ZD4I** [4,10] Zhaga-D4i certified luminaire (includes D4i certified DALI driver and SR 4-pin Zhaga Book 18 socket) **S** [5] FAWS Field adjustable wattage selector **N** None

Photo Control Receptacle	Surge Protection	Term Block	Decorative Option	Bird Guard	Finish [7]
R7 7 Pin tooless rotatable standard - no photocell **PH8** [7] 7 Pin tooless rotatable standard - with photocell **PH9** 7 Pin tooless rotatable standard - with shorting cap **PHX** [7] 7 Pin tooless rotatable standard - with long life photocell	**SP1** 10kV/10kA Surge Protector **SP2** 20kV/10kV Surge Protector	**T** Terminal Block **N** None	**L** [9] Ladder Rest **N** None	**B** Bird guard **N** None	**BKS** Black Smooth **WHS** White Smooth **BZS** Bronze Smooth **GNS** Green Smooth **BK** Black Texture **WH** White Texture **BZ** Bronze Texture **GN** Green Texture

Footnotes see page 2.

Connected lighting

Interact City connector node provides the plug and play wireless communications technology to connect your street light to the Interact City lighting management system.

Ordering Code	Accessory Description
LLC	Interact City cellular technology connector node

Contact the factory for additional support when connected lighting or additional services are desired.

TownView-TVLC-TVLN-Post-top-and-arm-mount-spec-sheet-en

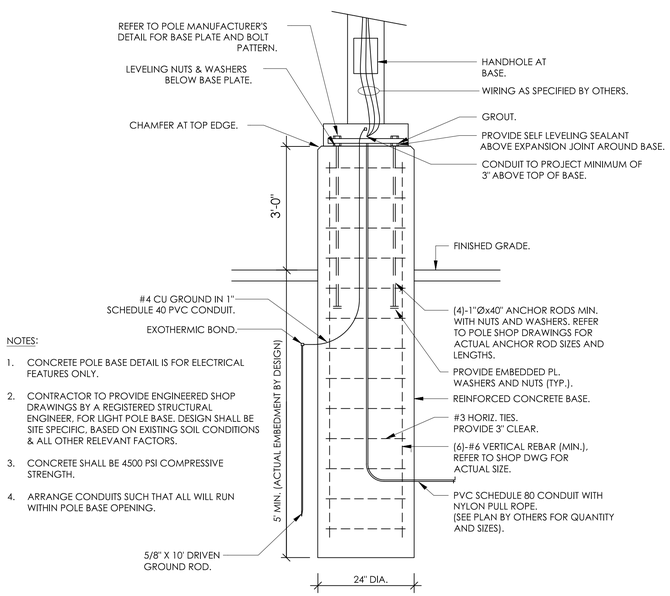

NOTES:

1. CONCRETE POLE BASE DETAIL IS FOR ELECTRICAL FEATURES ONLY.
2. CONTRACTOR TO PROVIDE ENGINEERED SHOP DRAWINGS BY A REGISTERED STRUCTURAL ENGINEER, FOR LIGHT POLE BASE. DESIGN SHALL BE SITE SPECIFIC, BASED ON EXISTING SOIL CONDITIONS & ALL OTHER RELEVANT FACTORS.
3. CONCRETE SHALL BE 4500 PSI COMPRESSIVE STRENGTH.
4. ARRANGE CONDUITS SUCH THAT ALL WILL RUN WITHIN POLE BASE OPENING.

TYPICAL CONCRETE LIGHT POLE BASE DETAIL

N.T.S

FOR PERMITTING PURPOSES ONLY
NOT RELEASED FOR CONSTRUCTION

Architecture
Engineering
Environmental
Land Surveying
BL Companies
355 Research Parkway
Meriden, CT 06450
(203) 630-1406

STATE OF CONNECTICUT · JOHN C. SCHUMACHER · 33266 · LICENSED PROFESSIONAL ENGINEER

PROPOSED MULTI-FAMILY RESIDENTIAL DEVELOPMENT
1947 CENTER GROTON ROAD
LEDYARD, CT 06339

REVISIONS No.	Date	Desc.

Designed	J.S.D.
Drawn	J.S.D.
Reviewed	R.M.R.
Scale	1"=40'
Project No.	2502197
Date	04/01/2026
CAD File: C2502197-60	

Title
LIGHTING NOTES AND DETAILS

Sheet No.
C6.100

Ref (s) : X@2502197-00 ; X@2502197D1 ; X@2502197-01 ; X@2502197-60 ; X@2502197-30 ; X@2502197-25

4/1/2026, PBICCITELLI, G:\JOBS25\2502197\DWG\C2502197-60.DWG,C6.100 24x36,

© 2026 BL COMPANIES, INC. THESE DRAWINGS SHALL NOT BE UTILIZED BY ANY PERSON, FIRM OR CORPORATION WITHOUT THE SPECIFIC WRITTEN PERMISSION OF BL COMPANIES.