GALES FERRY INTERMODAL

STERLING FACILITY

1761 ROUTE 12
GALES FERRY, CONNECTICUT 06335

MARCH 07, 2023
REVISED: APRIL 6, 2023
REVISED: MAY 1, 2023
REVISED: JUNE 21, 2023
REVISED: JULY 13, 2023

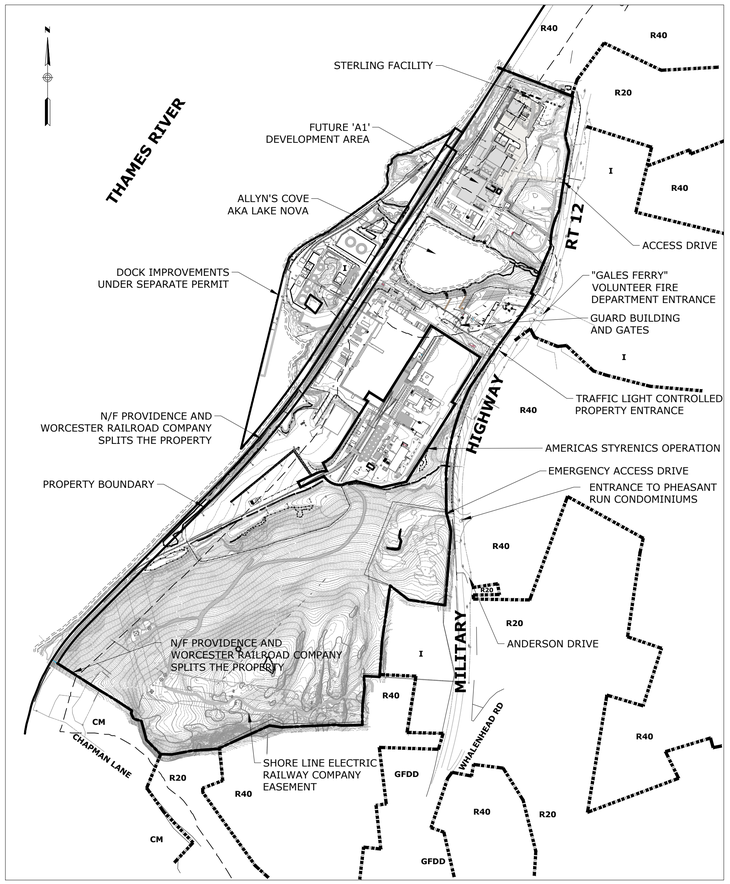

PROPERTY MAP, ZONING, AND ADJACENT FEATURES

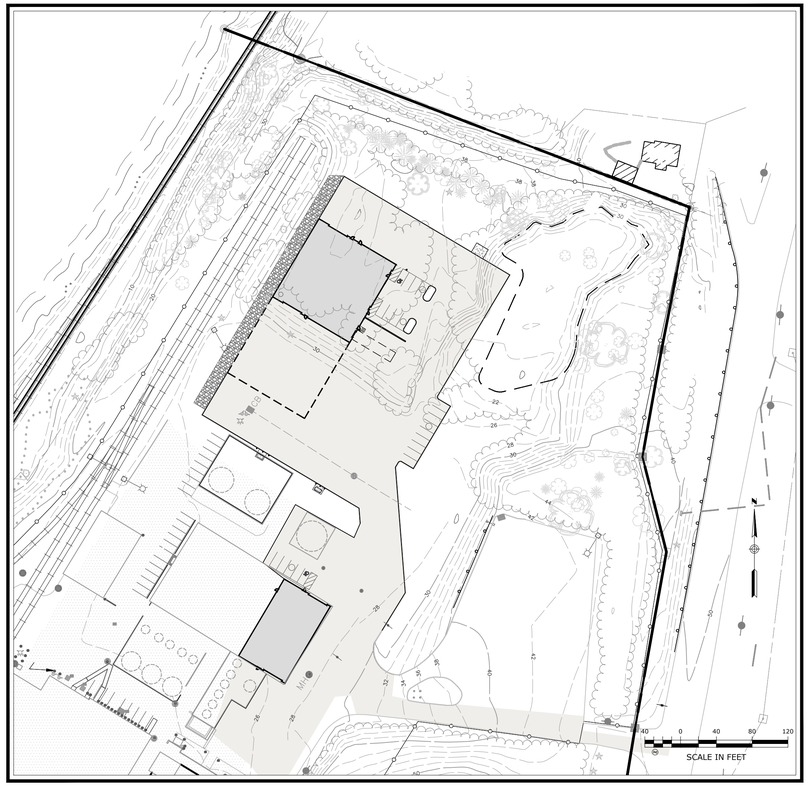

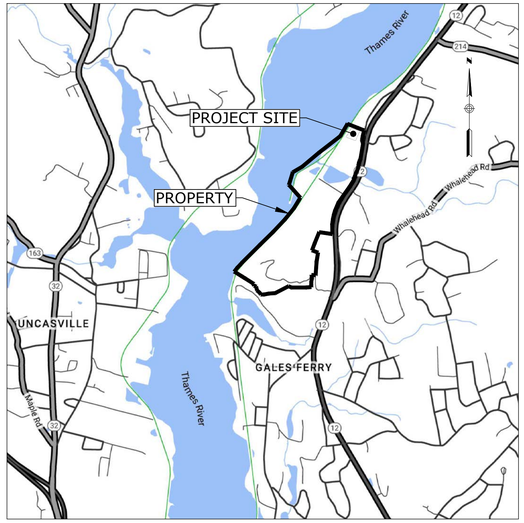

LOCATION MAP
SCALE: 1"=±2,000'

DRAWING INDEX

SHEET NO.	DRAWING	TITLE
1	-	COVER SHEET
2	C-1	NOTES, LEGEND, AND ABBREVIATIONS
3	#2010063	PROPERTY SURVEY
4	C-2	OVERALL SITE PLAN
5	C-3	SITE PREPARATION AND DEMOLITION PLAN
6	C-4	SITE LAYOUT PLAN
7	C-5	GRADING AND DRAINAGE PLAN
8	C-6	UTILITY PLAN
9	C-7	SUBSURFACE SEWAGE DISPOSAL SYSTEM PLAN
10	C-8	SUBSURFACE SEWAGE DISPOSAL SECTIONS, DETAILS & NOTES
11	C-9	SOIL EROSION AND SEDIMENT CONTROL PLAN
12	L-1	LANDSCAPING PLAN
13	C-10	PHOTOMETRIC AND LIGHTING PLAN
14	C-11	COASTAL AREA MANAGEMENT PLAN
15	C-12	SITE DETAILS 1
16	C-13	SITE DETAILS 2
17	C-14	SITE DETAILS 3
18	C-15	SOIL EROSION AND SEDIMENT CONTROL DETAILS
19	C-16	SIGHTLINE DEMONSTRATION PLAN

PZC PERMIT #_____ DATE OF APPROVAL_____ EXPIRATION DATE_____

PZC CHAIRMAN OR SECRETARY DATE

Property Owner / Applicant:

GALES FERRY INTERMODAL LLC
549 SOUTH STREET
QUINCY, MA 02169

STATE OF CONNECTICUT GEORGE F. ANDREWS No. 19281 LICENSED PROFESSIONAL ENGINEER

Prepared By:

Engineer:
Loureiro Engineering Associates, Inc.
100 Northwest Drive · Plainville, Connecticut 06062
Phone: 860-747-6181 · Fax: 860-747-8822
An Employee Owned Company · www.Loureiro.com
Engineering • Construction • EH&S • Energy
Waste • Facility Services • Laboratory

LEA# 045JC2.06

SURVEY NOTES

1. THIS PLAN IS BASED ON MAP REFERENCE A AND B.
2. REFERENCE IS MADE TO THE TOWN OF LEDYARD, CT LAND EVIDENCE RECORDS VOLUME 621 AT PAGE 981 FOR THE SUBJECT PROPERTY.
3. THE SUBJECT PROPERTY IS LOCATED ENTIRELY WITHIN THE "I" INDUSTRIAL ZONE DISTRICT.
4. "NATIONAL FLOOD INSURANCE PROGRAM FLOOD INSURANCE RATE MAP NEW LONDON COUNTY, CONNECTICUT ALL JURISDICTIONS PANEL 354, TOWN OF LEDYARD, MAP NUMBER 09011C0354G EFFECTIVE DATE JULY 18, 2011 FEDERAL EMERGENCY MANAGEMENT AGENCY" INDICATES THE SUBJECT PROPERTY IS LOCATED IN ZONE AE (EL 12) AND ZONE X.
5. THE SUBJECT PROPERTY IS SHOWN ON THE TOWN OF LEDYARD, CT TAX ASSESSOR MAP 61 BLOCK 2120 AS LOT 1761 WHICH HAS ASSIGNED STREET ADDRESSES OF 1761 ROUTE 12, GALES FERRY, CONNECTICUT 06335.
6. UNDERGROUND UTILITIES MUST BE FIELD VERIFIED PRIOR TO ANY EXCAVATION.
7. INLAND WETLANDS WERE DELINEATED IN THE FIELD BY JMM WETLAND CONSULTING SERVICES, LLC AND LOCATED BY LOUREIRO ENGINEERING ASSOCIATES, INC., GROTON, CONNECTICUT.
8. LIMITS OF FLOOD ZONE SHOWN ON PROPOSED PLAN ARE FROM FEMA NFIP MAP NUMBER 09011C0354G, EFFECTIVE DATE JULY 18, 2011.
9. LIMITS OF NATURAL DIVERSITY DATA BASE AREAS SHOWN ON THE OVERALL SITE PLAN ARE FROM THE CONNECTICUT DEPARTMENT OF ENERGY & ENVIRONMENTAL PROTECTION BUREAU OF NATURAL RESOURCES WILDLIFE DIVISION LEDYARD, CT MAP, DATED DECEMBER 2022.

MAP REFERENCES

A. PROPERTY SURVEY, PROPERTY OF TRINSEO LLC, #1737 & #1761 MILITARY HIGHWAY (ROUTE 12), LEDYARD, GALES FERRY, CT, PREPARED FOR: JAY CASHMAN, INC., 549 SOUTH STREET, QUINCY, MA, SCALE: 1"=100', DATE: 5/10/2022, BY CHA.

B. PROPERTY AND TOPOGRAPHIC SURVEY, #1737 & #1761 MILITARY HIGHWAY (ROUTE 12), LEDYARD, GALES FERRY, CT, PREPARED FOR: STYRON LLC "ALLYN'S POINT PLANT", BY CME, DATED SEPT. 2, 2010. THE FOLLOWING NOTES ARE FROM THIS MAP REFERENCE:

B.A. THE TYPE OF SURVEY PERFORMED IS A PERIMETER AND TOPOGRAPHIC SURVEY CONFORMING TO THE STANDARDS OF ACCURACY FOR A HORIZONTAL CLASS A-2 AND IS A RESURVEY OF THE SUBJECT PROPERTY.

B.B. VERTICAL INFORMATION DEPICTED HEREON CONFORMS TO VERTICAL CLASS T-3 STANDARDS OF ACCURACY. CONTOURS, PHYSICAL FEATURES AND OTHER INFORMATION WAS DERIVED FROM AERIAL MAPPING DONE BY GOLDEN AERIAL SURVEYS, INC. MAPPING SCALE 1"=40' PHOTO SCALE: 1"=500' PHOTO DATE: 04-27-2001

B.C. THIS SURVEY WAS PREPARED TO DEPICT THE BOUNDARY AND EXISTING CONDITIONS OF THE SUBJECT PROPERTY.

C. THE PROPERTY SURVEY, SHEET 1 OF 2, PREPARED BY CHA DATED 5/10/2022 - NOTE 6 STATES THE PURPOSE OF THE INDUSTRIAL ZONE REFERENCING SECTION 4.9A OF THE ZONING REGULATIONS. THE REGULATIONS HAVE SINCE BEEN UPDATED AND THE NEW "PURPOSE" IS: TO ENCOURAGE THE ADOPTION, CONTINUOUS AND EXPANSION OF MANUFACTURING, RESEARCH, AND INDUSTRIAL USES IN A WAY THAT PROTECTS OUR NATURAL ASSETS.

D. DRAINAGE IN THE ROUTE 12 RIGHT-OF-WAY FROM THE CONNECTICUT STATE HIGHWAY DEPARTMENT RIGHT OF WAY MAP, TOWN OF LEDYARD, NORWICH-GROTON ROAD, FROM ALLYN'S BROOK NORTHERLY TO LEDYARD-PRESTON TOWN LINE, MAP NUMBER 71-16, DATED NOVEMBER 5, 1957.

SITE NOTES:

1. THE APPLICANT/OWNER IS GALES FERRY INTERMODAL LLC OF 549 SOUTH STREET, QUINCY, MA.
2. THE APPLICANT IS PROPOSING TO CONSTRUCT A 6,000 SF INDUSTRIAL BUILDING AS WELL AS A 10,000 SF INDUSTRIAL BUILDING WITH A FUTURE 10,000 SF ADDITION, WHICH WILL BE UTILIZED BY THE APPLICANT, AND/OR ITS AFFILIATES, FOR STORAGE AND REPAIR OF MARINE EQUIPMENT AND APPURTENANCES WHICH ARE UTILIZED BY THE APPLICANT'S AFFILIATES IN CONJUNCTION WITH ITS MARINE CONTRACTING AND DREDGING OPERATIONS.
3. OTHER USES ON THE SITE CURRENTLY INCLUDE MANUFACTURING OF STYROFOAM PRODUCTS BY AMERICAS STYRENICS, A TENANT OF THE PROPERTY.
4. THE PURPOSE OF THESE PLANS IS FOR REVIEW BY THE LEDGE LIGHT HEALTH DISTRICT FOR COMPLIANCE WITH THE PUBLIC HEALTH CODE AND THE TOWN OF LEDYARD PLANNING & ZONING COMMISSION FOR A SPECIAL PERMIT APPLICATION FOR THE NEW INDUSTRIAL BUILDING. THESE PLANS ARE FOR PERMIT PURPOSES ONLY AND ARE NOT TO BE USED FOR CONTRACT DOCUMENTS.
5. FOR EXACT BUILDING DIMENSIONS, SEE BUILDING PLANS PROVIDED.
4. THE SUBJECT PROPERTY IS LOCATED WITHIN THE 'I' INDUSTRIAL ZONE. THE PARCEL DOES LIE WITHIN THE COASTAL AREA MANAGEMENT ZONE. A PORTION OF THE SITE IS WITHIN THE FEMA AE (EL 12) AND ZONE X WHILE THE PROPOSED BUILDING IS LOCATED OUTSIDE OF ANY FEMA FLOOD ZONES.
5. LOT COVERAGE CALCULATIONS:
   A. ALLOWED @ 70% = 70% X 6,882,480 SF = 4,817,736 SF
   B. PROVIDED: 2,091,741 (EXISTING) + 72,996 (PROPOSED) / 6,882,480 SF = 31.4 %
6. PARKING CALCULATIONS FOR NEW INDUSTRIAL BUILDING:
   A. REQUIRED:
      1 SPACE PER EMPLOYEE ON MAX SHIFT PLUS 1 SPACE PER FLEET VEHICLE
      10,000 SF BUILDING:
      1 SPACE PER EMPLOYEE ON MAX SHIFT X 10 EMPLOYEES PLUS 1 SPACE PER FLEET VEHICLE X 7 FLEET VEHICLES = 17 SPACES REQUIRED
      6,000 SF BUILDING:
      1 SPACE PER EMPLOYEE ON MAX SHIFT X 3 EMPLOYEES PLUS 1 SPACE PER FLEET VEHICLE X 2 FLEET VEHICLES = 5 SPACES REQUIRED
      TOTAL REQUIRED = 17 + 5 = 22
   B. PROPOSED:
      22 SPACES
   NOTE: OTHER ON-SITE BUILDINGS AND USES WERE NOT EVALUATED FOR PARKING REQUIREMENTS.
7. THERE SHALL BE NO ACTIVITY WITHIN THE WETLAND OR 100 FOOT INLAND WETLAND UPLAND REVIEW AREA UNLESS OTHERWISE PERMITTED AND AS SHOWN ON THESE PLANS.
8. ANY MODIFICATION TO THE PLANS, INCLUDING ANY RECONFIGURATION OF THE PROPOSED FLOOR PLAN, IMPOSED BY ANOTHER FEDERAL, STATE OR LOCAL AGENCY SHALL REQUIRE ADDITIONAL REVIEW BY TOWN STAFF OR THE COMMISSION, WHICHEVER IS APPROPRIATE.
9. THE CONTRACTOR SHALL OBTAIN ALL REQUIRED PERMITS INCLUDING A CONNECTICUT D.O.T. ENCROACHMENT PERMIT FOR ALL WORK WITHIN THE D.O.T. RIGHT-OF-WAY PRIOR TO CONSTRUCTION.
10. THE CONTRACTOR SHALL OBTAIN, REVIEW AND ADHERE TO ALL REQUIREMENTS AND ANY CONDITIONS OF APPROVAL OF THE TOWN OF LEDYARD.
11. NO SIGNAGE IS PROPOSED WITH THIS APPLICATION. ANY FUTURE SIGNAGE SHALL MEET THE ZONING REGULATIONS REQUIREMENTS AND WILL REQUIRE THE NECESSARY PERMITS.
12. ANY EXTERIOR LIGHTING SHALL BE FULL CUTOFF AND SHALL BE SHIELDED TO DIRECT LIGHT AND GLARE AWAY FROM ALL ADJOINING PROPERTIES.
13. ALL PROPOSED PAVEMENT MARKINGS SHALL BE INSTALLED IN THE LOCATIONS SHOWN WITH DURABLE WHITE PAVEMENT MARKING PAINT AND IN ACCORDANCE WITH THE MANUAL FOR UNIFORM TRAFFIC CONTROL DEVICES (M.U.T.C.D.). THE HANDICAP PARKING SYMBOLS SHALL BE WHITE WITH STANDARD HANDICAP BLUE BACKGROUNDS. ALL TRAFFIC CONTROL SIGNS SHALL CONFORM TO M.U.T.C.D. STANDARDS.
14. NEW SIDEWALKS, RAMPS AND DRIVEWAYS SHALL BE INSTALLED TO PROVIDE SMOOTH TRANSITION FOR PEDESTRIANS AND VEHICLES.
15. ALL CURB/HANDICAP RAMP DESIGNS SHALL CONFORM TO ANSI STANDARDS OR ADA ACT OF 1991, WHICHEVER IS MOST RESTRICTIVE.
16. ALL JOINTS BETWEEN EXISTING AND NEW PAVEMENT SHALL BE PROPERLY SAWCUT, TACK COATED AND SEALED AS APPLICABLE. ALL PROPOSED JOINTS SHALL BE FLUSH AND MATCH EXISTING GRADES. SAWCUT LINES MAY BE MODIFIED AS NECESSARY TO MEET CONSTRUCTION REQUIREMENTS UPON REVIEW AND APPROVAL BY THE DESIGN ENGINEER.
17. ALL EXISTING CURBING, PAVEMENT, ETC. DISTURBED AS A RESULT OF CONSTRUCTION ACTIVITIES SHALL BE REPLACED/RESTORED TO ORIGINAL CONDITION BY THE CONTRACTOR.
18. ALL TRAFFIC CONTROL SIGNS AND PAVEMENT MARKINGS SHALL CONFORM TO THE LATEST EDITION OF "MANUAL OF UNIFORM TRAFFIC CONTROL DEVICES" STANDARDS.

UTILITY NOTES:

1. UNDERGROUND UTILITY LOCATIONS ARE APPROXIMATE. IT IS THE RESPONSIBILITY OF THE CONTRACTOR TO VERIFY LOCATIONS PRIOR TO CONSTRUCTION. CONTRACTOR SHALL CONTACT "CALL BEFORE YOU DIG" AT 1-800-922-4455 PRIOR TO INITIATION OF THIS PROJECT. IF UTILITIES DIFFER FROM THOSE SHOWN ON THIS PLAN, ENGINEER SHALL BE NOTIFIED.
2. SCHEMATIC UNDERGROUND UTILITIES (ELECTRIC, TELEPHONE, COMMUNICATIONS, WATER) ARE SHOWN ON THESE PLANS FOR INFORMATIONAL PURPOSES ONLY. FINAL LOCATIONS WILL BE DETERMINED BY RESPECTIVE UTILITY AUTHORITIES AND INSTALLATION SHALL CONFORM TO UTILITY AUTHORITY POLICIES AND PRACTICES.
3. ALL NEW UTILITIES, INCLUDING CATV, WILL BE LOCATED UNDERGROUND.
4. ELECTRIC, TELEPHONE AND COMMUNICATION SERVICES SHALL CONFORM TO THE POLICIES AND PRACTICES OF THE APPROPRIATE UTILITY AUTHORITIES.
5. UTILITY SERVICE SIZES, MATERIALS, AND INSTALLATIONS SHALL BE APPROVED AND INSPECTED BY THE APPROPRIATE UTILITY COMPANY.
6. PROVIDE MINIMUM VERTICAL SEPARATION OF 12" FROM WATER MAIN TO DRAINAGE PIPING AND 18" TO SEWER PIPING.
7. LOCATION AND SIZE OF ALL BUILDING UTILITY CONNECTIONS SHALL BE COORDINATED WITH BUILDING ARCHITECTURAL PLANS AND APPROPRIATE UTILITY AUTHORITY.
8. WATER LINE INSTALLATION NOTES:
   A. DOMESTIC AND FIRE PROTECTION WATER SERVICES SHALL BE SIZED BASED ON DEMAN AND COORDINATED WITH GROTON UTILITIES, THE PROVIDER THROUGH THE TOWN OF LEDYARD WPCA.
   B. SITE MUST BE AT SUBGRADE BEFORE WATER UTILITIES CAN BE INSTALLED.
   C. ALL WATER MAIN AND SERVICE INSTALLATIONS SHALL CONFORM TO THE CITY OF GROTON, DEPARTMENT OF UTILITIES, WATER MAIN AND SERVICE CONSTRUCTION SPECIFICATIONS, WITH MOST CURRENT REVISIONS.
   D. APPROVED BACKFLOW PREVENTERS ARE REQUIRED ON ALL FIRE SPRINKLER AND DOMESTIC WATER LINES.
   E. MINIMUM COVER OVER TOP OF WATER LINES SHALL BE 4.5' FROM FINISHED GRADE.
   F. NO BACKFILLING OF PIPE SHALL BE DONE UNTIL A DESIGNATED REPRESENTATIVE OF THE CITY OF GROTON, DEPARTMENT OF UTILITIES HAS MADE AN INSPECTION AND INSTALLATION HAS BEEN APPROVED.
   G. PIPE SEPARATIONS:
      a. 10' MINIMUM BETWEEN WATER AND SEWER
      b. 10' MINIMUM BETWEEN WATER AND BUILDINGS
      c. 5' MINIMUM BETWEEN WATER AND CATCH BASINS OR DRAIN PIPES
   H. WATER LINE GATE VALVES TO BE "OPEN LEFT, CLOSE RIGHT".
   I. NEW WATER LINES TO BE CHLORINATED, PRESSURE TESTED, WATER QUALITY SAMPLED, AND FLUSHED PER CITY OF GROTON, DEPARTMENT OF UTILITIES REQUIREMENTS PRIOR TO BEING PLACED INTO SERVICE.
9. MINIMUM 6' SEPARATION BETWEEN ELECTRIC AND ALL OTHER PIPES SUCH AS WATER, SEWER AND DRAINS.
10. ALL UTILITIES AND ON-SITE STORM DRAINAGE SHALL BE STRUCTURALLY SUPPORTED TO MINIMIZE DISRUPTION FROM SETTLEMENT OF UNDERLYING SOIL.
11. UTILITY SERVICE TRENCHES LOCATED WITHIN 25 FEET OF THE SEPTIC SYSTEM SHALL BE BACKFILLED WITH NON-FREE DRAINING MATERIAL.

STORMWATER MANAGEMENT SYSTEM MAINTENANCE PLAN:

1. GENERAL
   A. THE ACCESS DRIVE AND PARKING AREAS SHOULD BE SWEPT AT LEAST ONCE PER YEAR, PREFERABLY AFTER THE END OF THE WINTER SANDING SEASON.
2. CATCH BASINS AND MANHOLES
   A. A CONNECTICUT-LICENSED HAULER SHALL PUMP THE SUMPS OF ON-SITE CATCH BASINS AND MANHOLES, AND SHALL DISPOSE OF THE PUMPING LEGALLY. ROAD SAND MAY BE REUSED FOR WINTER SANDING, BUT MAY NOT BE STORED ON-SITE. AS PART OF THE HAULING CONTRACT, THE HAULER SHALL NOTIFY THE PROPERTY OWNER IN WRITING WHERE THE MATERIAL IS BEING DISPOSED.
   B. EACH CATCH BASIN SHALL BE INSPECTED EVERY FOUR MONTHS, WITH ONE INSPECTION OCCURRING DURING THE MONTH OF APRIL. ANY DEBRIS OCCURRING WITHIN ONE FOOT FROM THE BOTTOM OF EACH SUMP SHALL BE REMOVED BY VACUUM "VACTOR" TYPE OF MAINTENANCE EQUIPMENT.
3. INFILTRATION
   A. THE INFILTRATION BASIN SHALL BE INSPECTED EVERY SIX MONTHS AND/OR AFTER STORM EVENTS OF 2 INCHES OF RAINFALL OR GREATER. INSPECTIONS SHALL INCLUDE THE FOLLOWING::
      a. INSPECT FOR STANDING WATER OR OTHER EVIDENCE OF CLOGGING.
      b. CHECK FOR SEDIMENT ACCUMULATION, TRASH, AND DEBRIS.
      c. CHECK FOR BLOCKAGES, STRUCTURAL INTEGRITY, AND EVIDENCE OF EROSION AT INLETS, OUTLETS, AND OVERFLOW SPILLWAYS;
   B. REGULAR MAINTENANCE INCLUDES THE FOLLOWING:
      a. PRUNE TREES AND SHRUBS AS NEEDED.
      b. REMOVE EXCESS LEAVES, DEBRIS AND EXCESS SEDIMENT FROM THE BOTTOM OF THE BASIN AS NECESSARY AND CUT OR MOW MEADOW GRASSES BETWEEN NOVEMBER 15-APRIL 1. LEAVE STEM STUBBLE 12"-18" FOR POLLINATOR NESTING HABITAT. PLANT MATTER SHALL BE LEFT IN PLACE OVER WINTER MONTHS TO INSULATES THE SOIL AND ADD ORGANIC MATTER TO THE SOIL. REMOVAL CRITERIA SHALL INCLUDE WHEN PLANT MATTER IS SMOTHERING OR KILLING VEGETATION AND AESTHETICS.
      c. REMOVE SEDIMENT GREATER THAN 3.0 INCH DEEP IN MARCH-APRIL IN A MANNER TO MINIMIZE DAMAGE TO VEGETATION. DISPOSE OF SEDIMENT OFF-SITE IN ACCORDANCE WITH ALL LOCAL AND STATE REQUIREMENTS.
      d. INSPECT SOIL AND REPAIR ERODED AREAS SEASONALLY OR AS NECESSARY.
      e. REMOVE ANY INVASIVE SPECIES (INCLUDING ROOTS) THAT HAVE BECOME ESTABLISHED WITHIN THE BASIN AND EMBANKMENTS.
      f. ADD SUPPLEMENTAL SEED AS NEEDED TO MAINTAIN 80% AREA COVER.
      g. IF THERE IS STANDING WATER IN THE INFILTRATION AREA 48 HOURS AFTER STORM EVENT, ROTOTILL OR CULTIVATE SURFACE OF FILTER MEDIA TO BREAK UP ANY HARD PACKED SEDIMENT AND RE-VEGETATE.
      h. DO NOT ADD LIME, FERTILIZER, HERBICIDE OR PESTICIDES. THE USE OF HERBICIDE IS RESTRICTED TO INVASIVE NON-NATIVE PLANT CONTROL UNDER THE DIRECTION OF A QUALIFIED ENVIRONMENTAL PROFESSIONAL
4. HYDRODYNAMIC SEPARATOR
   A. THE SEPARATOR SHALL BE CLEANED PERIODICALLY DURING CONSTRUCTION, AND AT THE END OF CONSTRUCTION ONCE THE LANDSCAPED AREAS ARE FULLY STABILIZED.
   B. FOR THE FIRST YEAR OF OPERATION FOLLOWING CONSTRUCTION, THE SEPARATOR SHALL BE INSPECTED ONCE EVERY 4 MONTHS FOR THE MONTHS OF NOVEMBER, MARCH, AND JULY. A GRADUATED MEASURING DEVICE SHALL BE INSERTED INTO MANHOLE AND MEASUREMENTS OF ANY ACCUMULATIONS WILL BE RECORDED. CLEANING WILL OCCUR WHEN DEBRIS HAS ACCUMULATED TO A DEPTH OF 20" OR GREATER.
   C. AFTER THE FIRST YEAR OF OPERATION, THE SEPARATOR SHALL BE INSPECTED A MINIMUM OF TWICE PER YEAR IN THE SAME MANNER AS DESCRIBED ABOVE. WHEN THE DEPTH OF ACCUMULATION REACHES 20", A CLEAN-OUT SHOULD BE PERFORMED AND SEDIMENT PROPERLY DISPOSED OF OFF-SITE. DEBRIS WILL BE REMOVED BY VACUUM "VACTOR" TYPE OF EQUIPMENT. THE MANHOLE SHOULD THEN BE PRESSURE WASHED TO REMOVE REMAINING SEDIMENT AND DEBRIS AND THE WATER SHOULD THEN BE VACUUMED OUT. ONCE CLEANING IS COMPLETE THE MANHOLE SHOULD BE REFILLED WITH WATER.
   D. A DETAILED MAINTENANCE LOGBOOK SHALL BE KEPT FOR THE UNIT. INFORMATION IS TO INCLUDE THE DATE OF INSPECTION, RECORD OF GRIT DEPTH, CONDITION OF TANK, OBSERVATION OF ANY FLOATABLE DEBRIS, AND DATE OF CLEANING PERFORMED.

DRAINAGE TEST PIT RESULTS

OBSERVED BY LOUREIRO ENGINEERING ASSOCIATES ON JUNE 2, 2023

TEST PIT 'TP-G1'
0- 28" DARK BROWN SILT, ORGANICS
28"- 31" LIGHT BROWN SILTY SAND, SOME GRAVEL
31"- 98" LIGHT GREY FINE TO MEDIUM SAND, SOME COBBLES, TRACE MOLLUSK SHELLS

GROUNDWATER @ 98"
NO MOTTLING
PERMEABILITY SAMPLE TAKEN @ 62"

TEST PIT 'TP-G2'
0-32" DARK BROWN SILT, ORGANICS
32"-35" LIGHT BROWN SILTY SAND, SAND GRAVEL
35"-105" LIGHT GREY FINE TO MEDIUM SAND, SOME COBBLES

GROUNDWATER @ 105"
NO MOTTLING
PERMEABILITY SAMPLE TAKEN @ 50"

ZONING DATA TABLE

'I' INDUSTRIAL ZONE
USE - COMMERCIAL

ITEM	REQUIRED	PROVIDED
LOT AREA	200,000 SQ FT (4.59 AC)	6,882,480 SQ FT (158 AC)
FRONTAGE	200 FT	3700 ± FT
LOT WIDTH	200 FT	> 200 FT
FRONT SETBACK	35 FT	309.51 FT
SIDE SETBACK	25 FT	160.20 FT
REAR SETBACK	25 FT	116.8 ± FT
LOT COVERAGE (%) (SEE SITE NOTE 5)	70% (4,817,736 SQ FT)	31.4 % (2,164,737 SQ FT)
BUILDING HEIGHT	65 FT	32 ± FT. (SEE ARCHITECTURAL PLANS)
PARKING (# OF SPACES) (SEE SITE NOTE 6)	22 SPACES	22 SPACES
WATER SUPPLY	MUNICIPAL	
SANITARY DISPOSAL	ONSITE SSDS	

LEGEND

AC	ACRES
BIT CONC	BITUMINOUS CONCRETE
TC	TOP OF CURB
CHD	CONNECTICUT HIGHWAY DEPARTMENT MONUMENT
BC	BOTTOM OF CURB
C.O.	CLEAN OUT
CL&P	CONNECTICUT LIGHT & POWER
LLR	LEDYARD LAND RECORDS
FF	FINISHED FLOOR
INV	INVERT
M/L	MORE OR LESS
MIN	MINIMUM
N/F	NOW OR FORMERLY
SF	SQUARE FEET
TYP	TYPICAL

—1—	EXISTING CONTOUR
—5—	EXISTING INDEX CONTOUR
x6.1	NEW SPOT GRADE
—1—	NEW MINOR CONTOUR
—5—	NEW MAJOR CONTOUR
——	BUILDING SETBACK LINE
—W—	MUNICIPAL WATER
—E—	UNDERGROUND ELECTRIC
	CATCH BASIN W/ E&SC
	SEDIMENT FENCE
	SIGN
	UTILITY POLE
	DECIDUOUS TREE
(13)	SOIL TYPE - TAKEN FROM NATURAL RESOURCES CONSERVATION SERVICE, WEBSOIL SURVEY, NATIONAL COOPERATIVE SOIL SURVEY

PZC PERMIT #__________ DATE OF APPROVAL__________ EXPIRATION DATE__________

PZC CHAIRMAN OR SECRETARY DATE

REV.	DESCRIPTION OF REVISION	DATE	APPR.
4	RESPONSE TO REVIEW COMMENTS	07/13/2023	SRM
3	RESPONSE TO REVIEW COMMENTS	06/21/2023	SRM
2	REVISED PER UPDATED LAYOUT	05/01/2023	SRM
1	REVISED PER UPDATED LAYOUT	04/06/2023	SRM

STAMP
STATE OF CONNECTICUT GEORGE F. ANDREWS JR. No. 19286 LICENSED PROFESSIONAL ENGINEER

Loureiro
Engineering • Construction • EH&S • Energy
Waste • Facility Services • Laboratory
Loureiro Engineering Associates, Inc.
100 Northwest Drive • Plainville, Connecticut 06062
Phone: 860-747-6181 • Fax: 860-747-8822
An Employee Owned Company • www.Loureiro.com
©Loureiro Engineering Associates, Inc.
All Rights Reserved 2023

SCALE: NOT TO SCALE
COMM. NO. 045JC2.06
DRAWN BY: ESF DATE: 04/06/2023
APPROVED BY: SRM DATE: 04/06/2023

NOTES, LEGEND, AND ABBREVIATIONS

GALES FERRY INTERMODAL LLC
1761 ROUTE 12, GALES FERRY, CONNECTICUT 06335

PREPARED FOR:
GALES FERRY INTERMODAL LLC
549 SOUTH STREET, QUINCY, MA 02169

DRAWING C-1

SHEET NO. 2 NO. OF SHEETS 19

V:\CT\GALES FERRY\ROUTE 12-1761\045JC2.06 LOCAL PERMIT FOR STERLING BUILDING\DWGS\CIVIL\NOTES LEGEND AND ABBREVIATIONS.DWG Tab: NOTES LEGEND AND ABBREVIATIONS Saved: 7/13/2023 12:01 PM by ESFARMER Plotted: 7/13/2023 2:08 PM

MAP REFERENCES

1.) "RIGHT OF WAY AND TRACK MAP OPERATED BY THE NORWICH AND WORCESTER R.R. CO. OPERATED BY THE NEW YORK NEW HAVEN AND HARTFORD R.R. CO. FROM WORCESTER TO GROTON STATION 3379+20 TO STATION 3405+60 TOWN OF LEDYARD, STATE OF CONN" SCALE 1"=50' DATE: JUNE 30, 1915 REVISED THROUGH OCTOBER 9, 1947, OFFICE OF VALUATION ENGINEER, BOSTON MASS. MAP NO. V.5063 / 129.

2.) "RIGHT OF WAY AND TRACK MAP OPERATED BY THE NORWICH AND WORCESTER R.R. CO. OPERATED BY THE NEW YORK NEW HAVEN AND HARTFORD R.R. CO. FROM WORCESTER TO GROTON STATION 3405+60 TO STATION 32+00. TOWN OF LEDYARD, STATE OF CONN" SCALE 1"=50' DATE: JUNE 30, 1915, OFFICE OF VALUATION ENGINEER, BOSTON MASS. MAP NO. V.5063 / 130.

3.) "RIGHT OF WAY AND TRACK MAP OPERATED BY THE NORWICH AND WORCESTER R.R. CO. OPERATED BY THE NEW YORK NEW HAVEN AND HARTFORD R.R. CO. FROM WORCESTER TO GROTON STATION 32+00 TO STATION 58+40 TOWN OF LEDYARD, STATE OF CONN" SCALE 1"=50' DATE: JUNE 30, 1915 REVISED THROUGH APRIL 11, 1951, OFFICE OF VALUATION ENGINEER, BOSTON MASS. MAP NO. V.5063 / 131.

4.) "RIGHT OF WAY AND TRACK MAP OPERATED BY THE NORWICH AND WORCESTER R.R. CO. OPERATED BY THE NEW YORK NEW HAVEN AND HARTFORD R.R. CO. FROM WORCESTER TO GROTON STATION 58+40 TO STATION 84+80 TOWN OF LEDYARD, STATE OF CONN" SCALE 1"=50' DATE: JUNE 30, 1915 REVISED THROUGH APRIL 11, 1951, OFFICE OF VALUATION ENGINEER, BOSTON MASS. MAP NO. V.5063 / 132.

MAP REFERENCES—CONTINUED

5.) "NORWICH AND WORCESTER RAILROAD REAL ESTATE & RIGHT OF WAY DEPARTMENT LAND IN LEDYARD, CONN. TO BE CONVEYED TO THE DOW CHEMICAL COMPANY" SCALE 1"=200' DATE: SEPTEMBER 1950 REVISED THROUGH OCTOBER 1950. ON FILE AS MAP NO. 8A.

6.) "LOCATION OF THE RIGHT OF WAY OF THE CONNECTICUT LIGHT & POWER COMPANY ACROSS THE PROPERTY OF THE DOW CHEMICAL COMPANY, TOWN OF LEDYARD, COUNTY OF NEW LONDON, STATE OF CONNECTICUT" SCALE 1"=200' DATE: APRIL 17, 1951.

7.) "MAP OF PROPERTY OWNED BY THE DOW CHEMICAL COMPANY LOCATED AT ALLYN'S POINT ON THE WEST SIDE OF ROUTE 12 AND EAST OF THE NEW YORK NEW HAVEN & HARTFORD RAILROAD CO. LEDYARD, CONN." SCALE: 1"=100' DATE: JULY 1952 REVISED AUGUST 1953, G.L. BILDERBECK CONSULTING ENGINEERS, NEW LONDON, CONN.

8.) "MAP SHOWING PROPERTY OWNED BY DOW CHEMICAL COMPANY, ALLYN'S POINT, LEDYARD, CONN." SCALE: 1"=100' DATE : DECEMBER 1953, G.L. BILDERBECK, CONSULTING ENGINEERS, NEW LONDON, CONN, ON FILE AS MAP NO. 43A.

MAP REFERENCES—CONTINUED

9.) "CONNECTICUT STATE HIGHWAY DEPARTMENT RIGHT OF WAY MAP TOWN OF LEDYARD NORWICH–GROTON ROAD FROM ALLYN'S BROOK NORTHERLY TO LEDARD–PRESTON TOWN LINE" SCALE 1"=40' DATE: NOVEMBER 5, 1957, SHEETS 1 THROUGH 3 OF 4. PROJECT NUMBER: 71–16. THESE MAPS SUPERSEDE PROJECT 71–05. SHEET 3 REVISED AUGUST 25, 1967.

10.) "CONNECTICUT STATE HIGHWAY DEPARTMENT RIGHT OF WAY MAP TOWN OF LEDYARD GROTON–NORWICH ROAD GALES FERRY ROAD TO ALLYN'S BROOK" SCALE 1"=40' DATE: NOVEMBER 5, 1957, SHEETS 1 THROUGH 4 OF 4. PROJECT NUMBER 71–15. THESE MAPS SUPERSEDE PROJECT 71–04. SHEET 1 REVISED THROUGH MAY 17, 2004.

11.) "PLAN SHOWING LANDS NOW AND FORMALLY OF H. WINTHROP HURLBUTT LEDYARD, CONNECTICUT" SCALE 1"=100' DATE: OCTOBER 1964, GEORGE H. DIETER, LAND SURVEYOR, ON FILE AS MAP # 226.

12.) "PLAN OF PROPERTY TO BE CONVEYED TO THE TOWN OF LEDYARD BY THE DOW CHEMICAL COMPANY, TOWN OF LEDYARD, CONN." SCALE: 1"=100' DATE: APRIL 1972, CHANDLER, PALMER & KING, NORWICH, CONN.

MAP REFERENCES—CONTINUED

13.) "PLAN SHOWING PARCELS OF LAND WITH BUILDINGS PROPERTY OF JAMES L. LEWIS AND ALICE L. LEWIS, PENITWAY AT WEST END CHAPMAN LANE LEDYARD, CONNECTICUT" SCALE 1"=20' DATE JUNE 1976, GEORGE H. DIETER, LAND SURVEYOR, ON FILE AS MAP # 672.

14.) "TOPOGRAPHICAL PLAN, PLAN OF A PORTION OF DOW CHEMICAL CO. ALLYN'S POINT PLANT GALES FERRY, CONN." SCALE: 1"=40' DATE: JULY 9, 1984 REVISIONS THROUGH AUGUST 28, 1984, CHANDLER, PALMER & KING, NORWICH, CONN.

15.) "MONUMENTED PROPERTY SURVEY MAP DEPICTING LAND OF GALES FERRY MARINA, INC. A PORTION OF LAND OF JAMES L. LEWIS AND LUCILLE A LUPINACCI, CHAPMAN LANE, GALES FERRY, LEDYARD, CONNECTICUT" SCALE: 1"=40' DATE: MARCH 26, 1994 REVISED APRIL 19, 1994, DAVID L. STEIN, LAND SURVEYOR, WESTBROOK, CONNECTICUT, ON FILE AS MAP #1753.

16.) COMPILATION PLAN MAP SHOWING EASEMENT AREA TO BE GRANTED TO THE YANKEE GAS SERVICES COMPANY ACROSS THE PROPERTY OF DOW CHEMICAL COMPANY (ALLYN'S POINT PLANT) #1761 ROUTE 12 GALES FERRY–LEDYARD CONNECTICUT SCALE: 1"=60' SHEET 1 OF 1 DATE: 03–04–2010 YANKEE FILE #E0048, BY CME ASSOCIATES, INC. ON FILE AS MAP #2629.

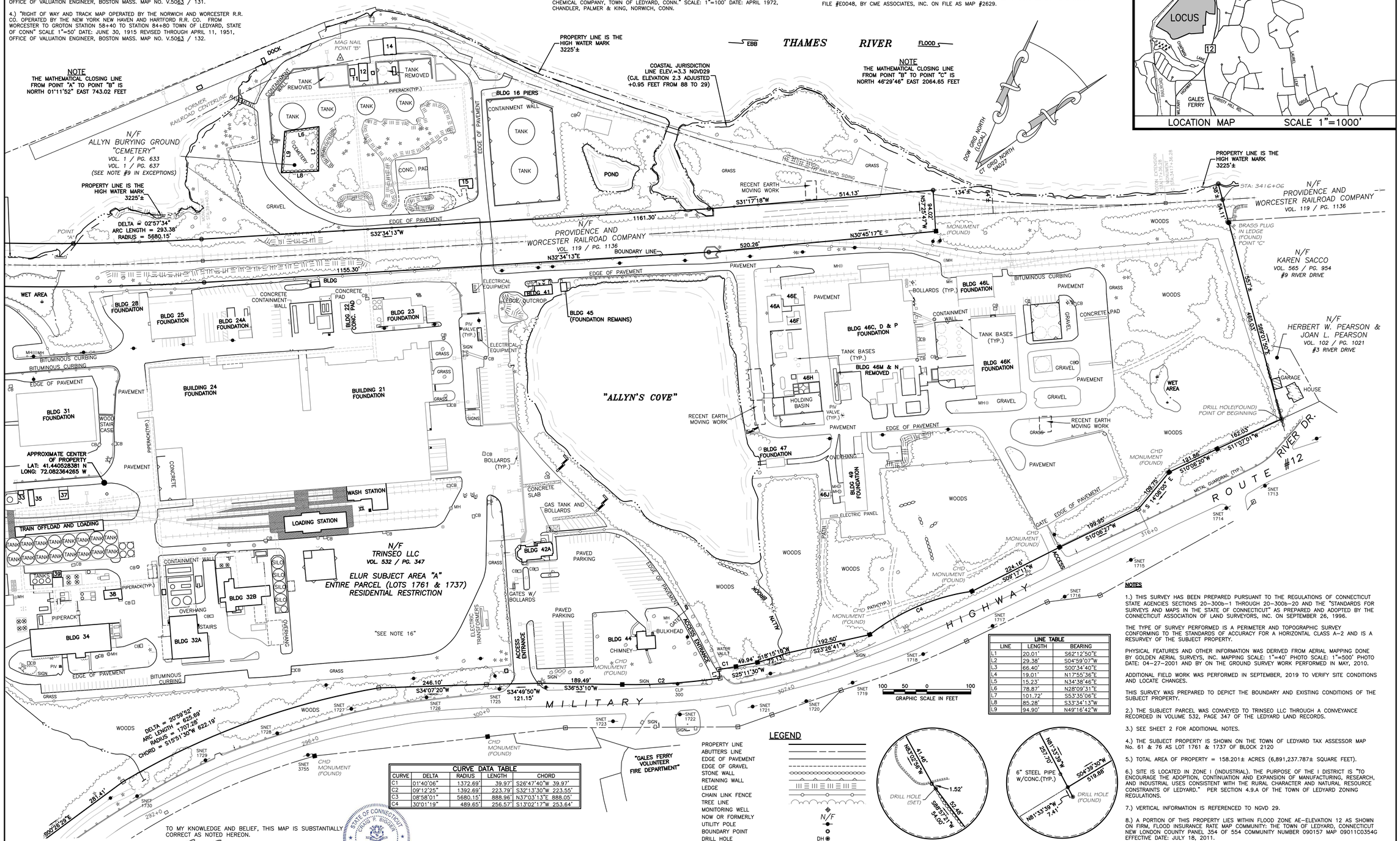

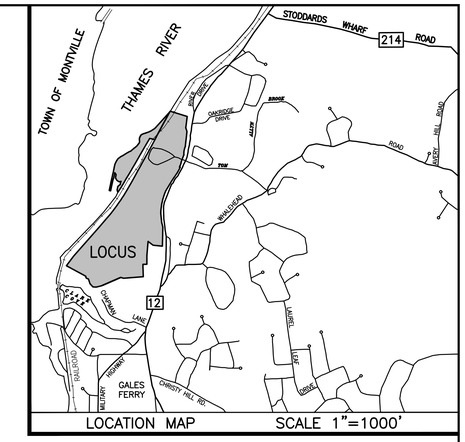

CURVE DATA TABLE				
CURVE	DELTA	RADIUS	LENGTH	CHORD
C1	01°40'06"	1372.69'	39.97'	S26°47'40"W 39.97'
C2	09°12'25"	1392.69'	223.79'	S32°13'30"W 223.55'
C3	08°58'01"	5680.15'	888.96'	N37°03'13"E 888.05'
C4	30°01'19"	489.65'	256.57'	S13°02'17"W 253.64'

LINE TABLE		
LINE	LENGTH	BEARING
L1	20.01'	S62°12'50"E
L2	29.38'	S04°59'07"W
L3	66.40'	S00°34'40"E
L4	19.01'	N17°55'36"E
L5	15.23'	N34°38'46"E
L6	78.87'	N28°09'31"E
L7	101.72'	S53°35'06"E
L8	85.28'	S33°34'13"W
L9	94.90'	N49°16'42"W

LEGEND

PROPERTY LINE
ABUTTERS LINE
EDGE OF PAVEMENT
EDGE OF GRAVEL
STONE WALL
RETAINING WALL
LEDGE
CHAIN LINK FENCE
TREE LINE
MONITORING WELL
NOW OR FORMERLY — N/F
UTILITY POLE
BOUNDARY POINT
DRILL HOLE — DH
IRON MONUMENT
CONNECTICUT HIGHWAY DEPARTMENT MONUMENT(CHD)
WATER VALVE — WV

DETAIL "B"
1"=30'

DETAIL "A"
1"=30'

NOTES

1.) THIS SURVEY HAS BEEN PREPARED PURSUANT TO THE REGULATIONS OF CONNECTICUT STATE AGENCIES SECTIONS 20–300b–1 THROUGH 20–300b–20 AND THE "STANDARDS FOR SURVEYS AND MAPS IN THE STATE OF CONNECTICUT" AS PREPARED AND ADOPTED BY THE CONNECTICUT ASSOCIATION OF LAND SURVEYORS, INC. ON SEPTEMBER 26, 1996.

THE TYPE OF SURVEY PERFORMED IS A PERIMETER AND TOPOGRAPHIC SURVEY CONFORMING TO THE STANDARDS OF ACCURACY FOR A HORIZONTAL CLASS A–2 AND IS A RESURVEY OF THE SUBJECT PROPERTY.

PHYSICAL FEATURES AND OTHER INFORMATION WAS DERIVED FROM AERIAL MAPPING DONE BY GOLDEN AERIAL SURVEYS, INC. MAPPING SCALE: 1"=40' PHOTO SCALE: 1"=500' PHOTO DATE: 04–27–2001 AND BY ON THE GROUND SURVEY WORK PERFORMED IN MAY, 2010.

ADDITIONAL FIELD WORK WAS PERFORMED IN SEPTEMBER, 2019 TO VERIFY SITE CONDITIONS AND LOCATE CHANGES.

THIS SURVEY WAS PREPARED TO DEPICT THE BOUNDARY AND EXISTING CONDITIONS OF THE SUBJECT PROPERTY.

2.) THE SUBJECT PARCEL WAS CONVEYED TO TRINSEO LLC THROUGH A CONVEYANCE RECORDED IN VOLUME 532, PAGE 347 OF THE LEDYARD LAND RECORDS.

3.) SEE SHEET 2 FOR ADDITIONAL NOTES.

4.) THE SUBJECT PROPERTY IS SHOWN ON THE TOWN OF LEDYARD TAX ASSESSOR MAP No. 61 & 76 AS LOT 1761 & 1737 OF BLOCK 2120

5.) TOTAL AREA OF PROPERTY = 158.201± ACRES (6,891,237.787± SQUARE FEET).

6.) SITE IS LOCATED IN ZONE I (INDUSTRIAL). THE PURPOSE OF THE I DISTRICT IS "TO ENCOURAGE THE ADOPTION, CONTINUATION AND EXPANSION OF MANUFACTURING, RESEARCH, AND INDUSTRIAL USES CONSISTENT WITH THE RURAL CHARACTER AND NATURAL RESOURCE CONSTRAINTS OF LEDYARD." PER SECTION 4.9.A OF THE TOWN OF LEDYARD ZONING REGULATIONS.

7.) VERTICAL INFORMATION IS REFERENCED TO NGVD 29.

8.) A PORTION OF THIS PROPERTY LIES WITHIN FLOOD ZONE AE–ELEVATION 12 AS SHOWN ON FIRM, FLOOD INSURANCE RATE MAP COMMUNITY: THE TOWN OF LEDYARD, CONNECTICUT NEW LONDON COUNTY PANEL 354 OF 554 COMMUNITY NUMBER 090157 MAP 09011C0354G EFFECTIVE DATE: JULY 18, 2011.

9.) ABOVEGROUND AND UNDERGROUND UTILITY STRUCTURES AND FACILITY LOCATIONS DEPICTED AND NOTED HEREON ARE THE RESULT OF OBSERVED EVIDENCE.

TO MY KNOWLEDGE AND BELIEF, THIS MAP IS SUBSTANTIALLY CORRECT AS NOTED HEREON.

CRAIG P. BIGGER, L.S. #70413 — 5/10/2022 DATE

STATE OF CONNECTICUT — CRAIG P. BIGGER — No. 70413 — LICENSED LAND SURVEYOR

Drawing Copyright © 2015

CHA
33 Wilbur Cross Way, Mansfield, CT 06268
101 East River Drive, 1st Floor
East Hartford, CT 06108
860-885-1055 | www.chacompanies.com

PREPARED FOR:

JAY CASHMAN, INC.

549 SOUTH STREET
QUINCY, MA

IT IS A VIOLATION OF LAW FOR ANY PERSON, UNLESS THEY ARE ACTING UNDER THE DIRECTION OF A LICENSED PROFESSIONAL ENGINEER, ARCHITECT, LANDSCAPE ARCHITECT OR LAND SURVEYOR TO ALTER AN ITEM IN ANY WAY. IF AN ITEM BEARING THE STAMP OF A LICENSED PROFESSIONAL IS ALTERED, THE ALTERING ENGINEER, ARCHITECT, LANDSCAPE ARCHITECT OR LAND SURVEYOR SHALL STAMP THE DOCUMENT AND INCLUDE THE NOTATION "ALTERED BY" FOLLOWED BY THEIR SIGNATURE, THE DATE OF SUCH ALTERATION, AND A SPECIFIC DESCRIPTION OF THE ALTERATION.

PROPERTY OF

TRINSEO LLC

#1737 & 1761 MILITARY HIGHWAY (ROUTE 12)
LEDYARD, GALES FERRY, CT

No.	Submittal / Revision	App'd.	By	Date

PROPERTY SURVEY

Designed By:	Drawn By:	Checked By:
---	CB	CB
Issue Date:	Project No:	Scale:
5/10/2022	076625	1" = 100'

Drawing No.:

SHEET 1 OF 2

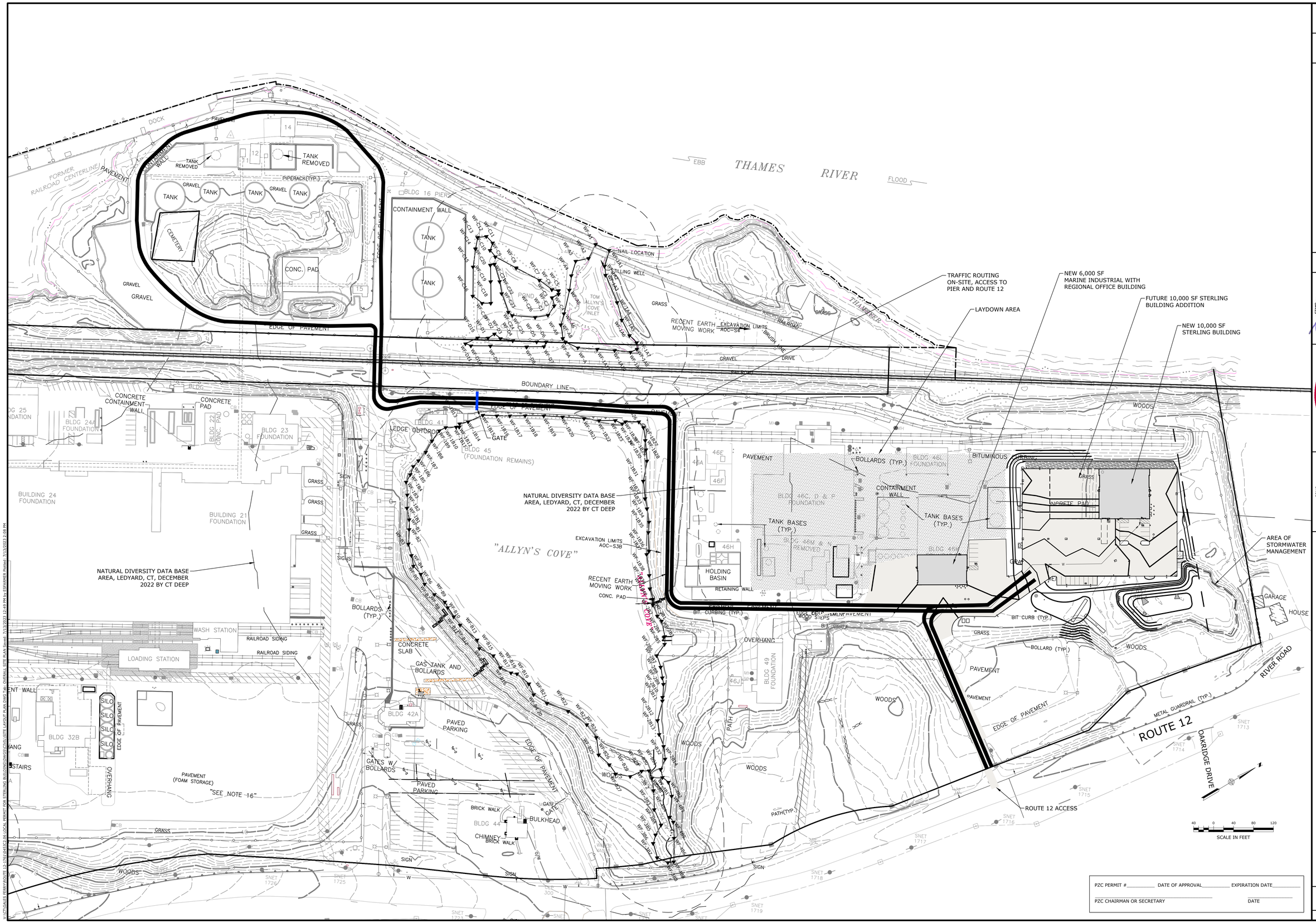

REV.	DESCRIPTION OF REVISION	DATE	APPR.
4	RESPONSE TO REVIEW COMMENTS	07/13/2023	SRM
3	RESPONSE TO REVIEW COMMENTS	06/21/2023	SRM
2	REVISED PER UPDATED LAYOUT	05/01/2023	SRM
1	REVISED PER UPDATED LAYOUT	04/06/2023	SRM

STATE OF CONNECTICUT GEORGE F. ANDREWS No. 19286 LICENSED PROFESSIONAL ENGINEER

Loureiro
Engineering • Construction • ENGS • Energy
Waste • Facility Services • Laboratory
Loureiro Engineering Associates, Inc.
100 Northwest Drive • Plainville, Connecticut 06062
Phone: 860-747-6181 • Fax: 860-747-8822
An Employee Owned Company • www.Loureiro.com
©Loureiro Engineering Associates, Inc.
All Rights Reserved 2023

SCALE 1"=100'
COMM. NO. 045JC2.06
DRAWN BY ESF DATE 04/06/2023
APPROVED BY SRM DATE 04/06/2023

OVERALL SITE PLAN

GALES FERRY INTERMODAL
1761 ROUTE 12, GALES FERRY, CONNECTICUT 06335

PREPARED FOR:
GALES FERRY INTERMODAL LLC
549 SOUTH STREET, QUINCY, MA 02169

DRAWING
C-2

SHEET NO. 4 NO. OF SHEETS 19

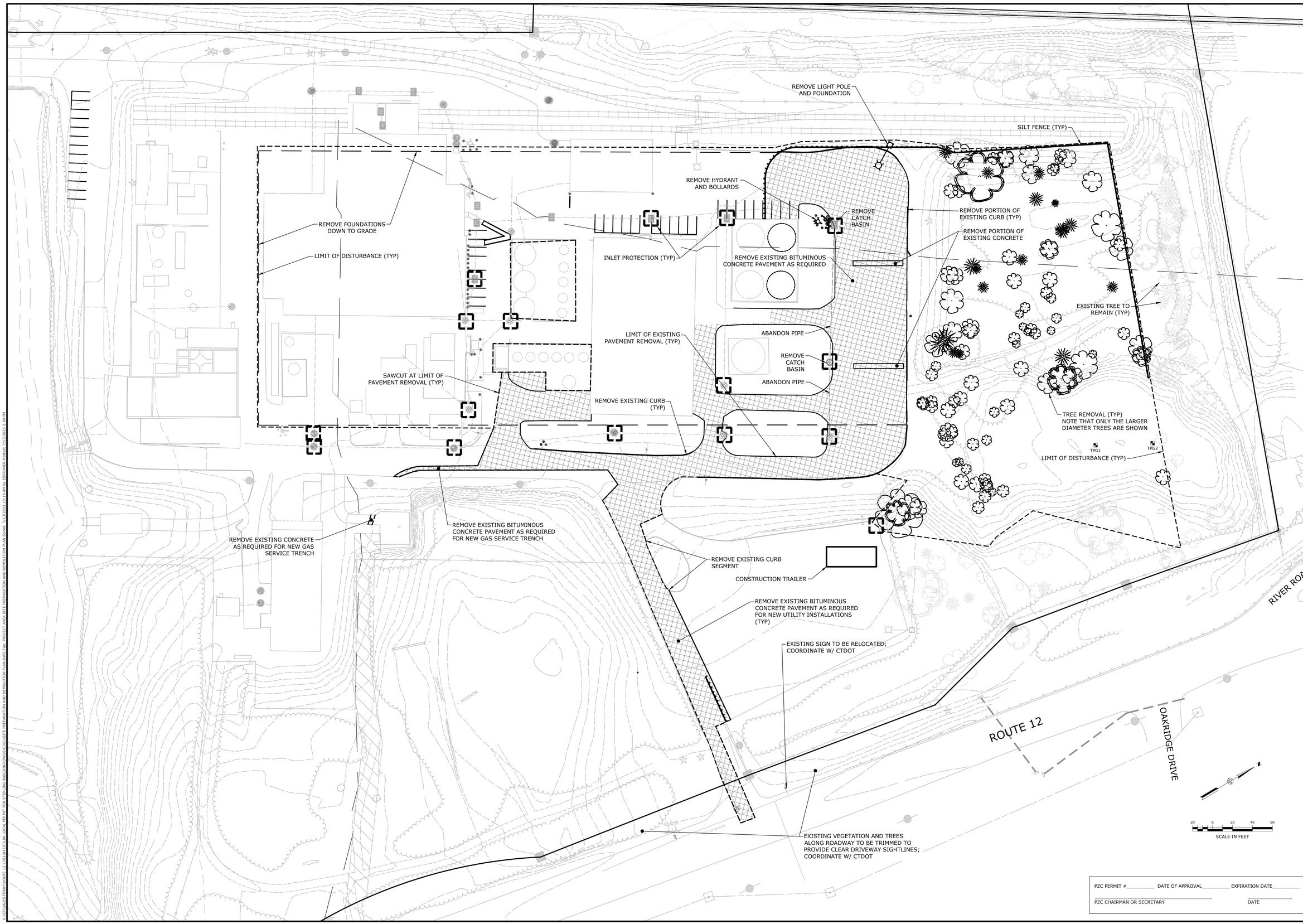

PZC PERMIT #_____ DATE OF APPROVAL_____ EXPIRATION DATE_____

PZC CHAIRMAN OR SECRETARY _____ DATE _____

REV.	DESCRIPTION OF REVISION	DATE	APPR.
4	RESPONSE TO REVIEW COMMENTS	07/13/2023	SRM
3	RESPONSE TO REVIEW COMMENTS	06/21/2023	SRM
2	REVISED PER UPDATED LAYOUT	05/01/2023	SRM
1	REVISED PER UPDATED LAYOUT	04/06/2023	SRM

STATE OF CONNECTICUT GEORGE F. ANDREWS No. 19286 LICENSED PROFESSIONAL ENGINEER

Loureiro
Engineering • Construction • ENGS • Energy
Waste • Facility Services • Laboratory

Loureiro Engineering Associates, Inc.
100 Northwest Drive • Plainville, Connecticut 06062
Phone: 860-747-6181 • Fax: 860-747-8822
An Employee Owned Company • www.Loureiro.com

©Loureiro Engineering Associates, Inc.
All Rights Reserved 2023

SCALE 1"=40'
COMM. NO. 045JC2.06
DRAWN BY ESF DATE 04/06/2023
APPROVED BY SRM DATE 04/06/2023

SITE PREPARATION AND DEMOLITION PLAN

GALES FERRY INTERMODAL
1761 ROUTE 12, GALES FERRY, CONNECTICUT 06335

PREPARED FOR:
GALES FERRY INTERMODAL LLC
549 SOUTH STREET, QUINCY, MA 02169

DRAWING
C-3

SHEET NO. 5 NO. OF SHEETS 19

V:\CT\GALES FERRY\ROUTE 12-1761\045JC2.06 LOCAL PERMIT FOR STERLING BUILDING\DWGS\CIVIL\SITE PREPARATION AND DEMOLITION PLAN.DWG Tab: PROJECT AREA SITE PREPARATION AND DEMOLITION PLAN Saved: 7/13/2023 10:19 AM by ESFARMER Plotted: 7/13/2023 2:09 PM

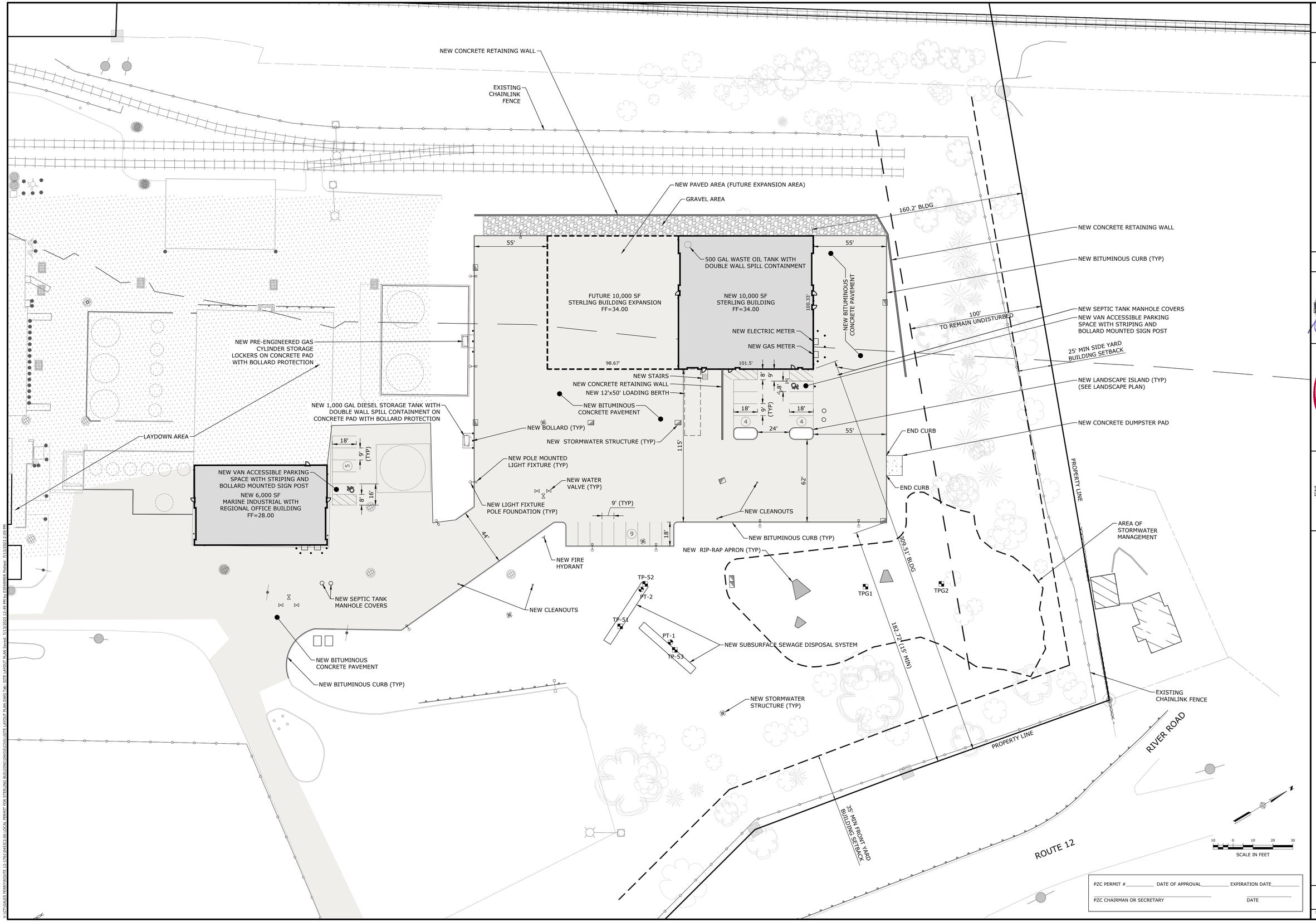

PZC PERMIT #_____ DATE OF APPROVAL_____ EXPIRATION DATE_____

PZC CHAIRMAN OR SECRETARY _____ DATE

REV.	DESCRIPTION OF REVISION	DATE	APPR.
4	RESPONSE TO REVIEW COMMENTS	07/13/2023	SRM
3	RESPONSE TO REVIEW COMMENTS	06/21/2023	SRM
2	REVISED PER UPDATED LAYOUT	05/01/2023	SRM
1	REVISED PER UPDATED LAYOUT	04/06/2023	SRM

STATE OF CONNECTICUT GEORGE F. ANDREWS No. 19286 LICENSED PROFESSIONAL ENGINEER

Loureiro
Engineering • Construction • ENGS • Energy
Waste • Facility Services • Laboratory
Loureiro Engineering Associates, Inc.
100 Northwest Drive • Plainville, Connecticut 06062
Phone: 860-747-6181 • Fax: 860-747-8822
An Employee Owned Company • www.Loureiro.com

©Loureiro Engineering Associates, Inc.
All Rights Reserved 2023

SCALE 1"=30'
COMM. NO. 045JC2.06
DRAWN BY ESF DATE 04/06/2023
APPROVED BY SRM DATE 04/06/2023

SITE LAYOUT PLAN

GALES FERRY INTERMODAL
1761 ROUTE 12, GALES FERRY, CONNECTICUT 06335
PREPARED FOR:
GALES FERRY INTERMODAL LLC
549 SOUTH STREET, QUINCY, MA 02169

DRAWING C-4

SHEET NO. 6 NO. OF SHEETS 19

V:\CT\GALES FERRY\ROUTE 12-1761\045JC2.06 LOCAL PERMIT FOR STERLING BUILDING\DWGS\CIVIL\SITE LAYOUT PLAN.DWG Tab: SITE LAYOUT PLAN Saved: 7/13/2023 12:49 PM by ESFARMER Plotted: 7/13/2023 2:09 PM

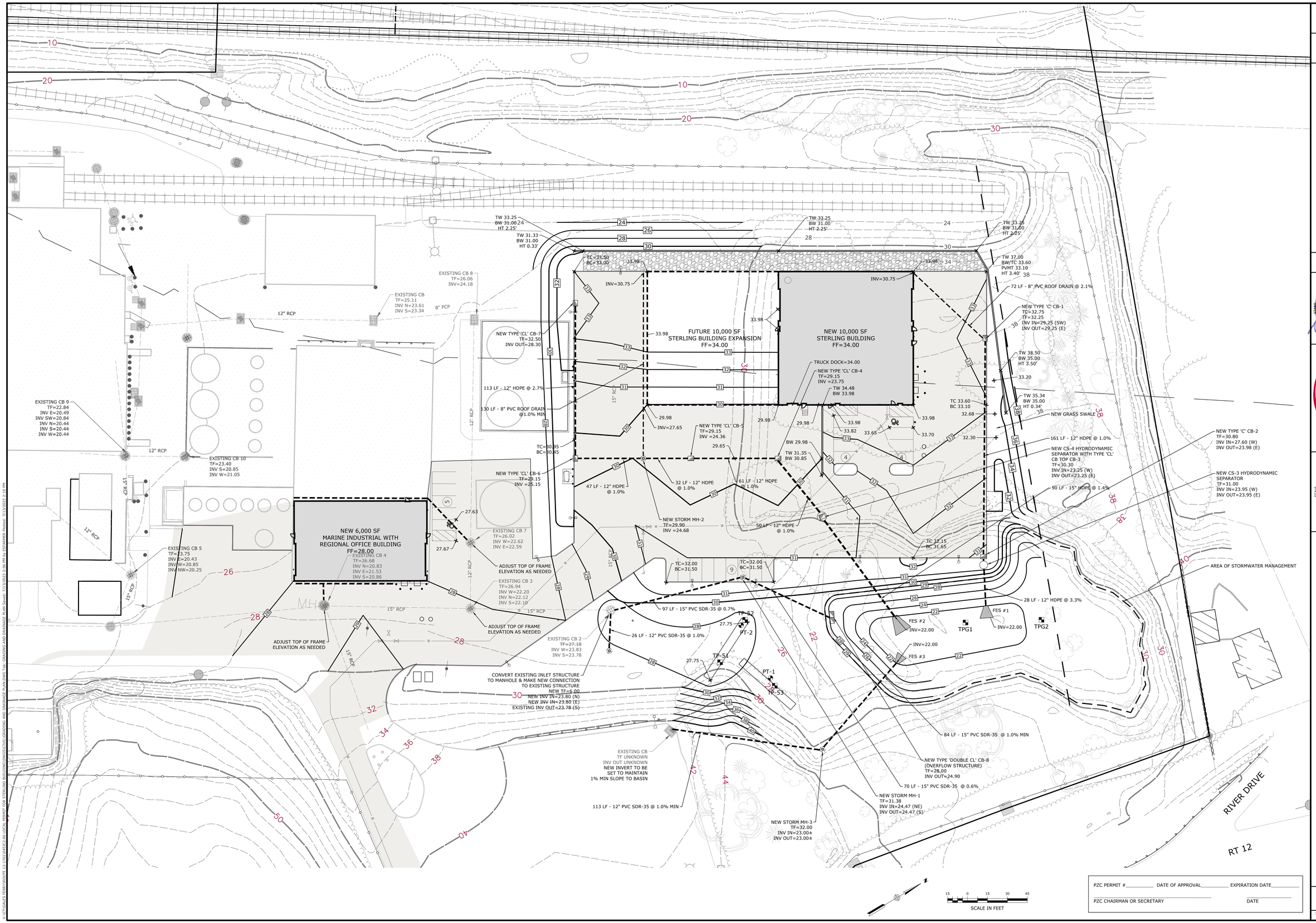

PZC PERMIT #_____ DATE OF APPROVAL_____ EXPIRATION DATE_____

PZC CHAIRMAN OR SECRETARY _____ DATE _____

REV.	DESCRIPTION OF REVISION	DATE	APPR.
4	RESPONSE TO REVIEW COMMENTS	07/13/2023	SRM
3	RESPONSE TO REVIEW COMMENTS	06/21/2023	SRM
2	REVISED PER UPDATED LAYOUT	05/01/2023	SRM
1	REVISED PER UPDATED LAYOUT	04/06/2023	SRM

STATE OF CONNECTICUT
GEORGE F. ANDRESS, JR.
No. 18281
LICENSED PROFESSIONAL ENGINEER

Loureiro
Engineering Associates, LLC
Water • Facility Services • Laboratory
Loureiro Engineering Associates, Inc.
100 Torrey Street, Brockton, MA 02302
Phone: 860-747-6181 • Fax: 860-747-8822
An Employee Owned Company • www.Loureiro.com
©Loureiro Engineering Associates, Inc.
All Rights Reserved 2022

SCALE 1"=30'
COMM. NO. 0453C2.06
DATE 04/06/2023
DRAWN BY ESF
DATE 04/06/2023
APPROVED BY SRM

GRADING AND DRAINAGE PLAN

PREPARED FOR:
GALES FERRY INTERMODAL
1761 ROUTE 12, GALES FERRY, CONNECTICUT 06335
GALES FERRY INTERMODAL LLC
549 SOUTH STREET, QUINCY, MA 02169

DRAWING **C-5**

SHEET NO. 7 NO. OF SHEETS 19

V:\CT\GALES FERRY\ROUTE 12-1761\0453C2.06 LOCAL PERMIT FOR STERLING BUILDING\DWGS\CIVIL\GRADING AND DRAINAGE PLAN.DWG Tab: GRADING AND DRAINAGE PLAN Saved: 7/13/2023 2:06 PM by ESFARMER Plotted: 7/13/2023 2:10 PM

FUTURE 10,000 SF
STERLING BUILDING EXPANSION
FF=34.00

NEW 10,000 SF
STERLING BUILDING
FF=34.00

NEW ELECTRIC METER

NEW GAS METER

NEW BOLLARDS;
AVOID CONFLICT
WITH UTILITIES

NEW SEPTIC TANK
(SEE SHEET 9)

NEW FIRE HYDRANT, EXACT
LOCATION TO BE APPROVED
BY THE FIRE MARSHAL

NEW STORMWATER
PIPE (TYP)

NEW BOLLARDS;
AVOID CONFLICT
WITH UTILITIES

NEW 6,000 SF
MARINE INDUSTRIAL WITH
REGIONAL OFFICE BUILDING
FF=28.00

NEW ELECTRIC METER

NEW GAS METER

NEW SEPTIC TANK
(SEE SHEET 9)

NEW TEE

NEW GAS SERVICE

TP-62

PT-2

TP-51

PT-1

TP-53

TPG1

TPG2

NEW ELECTRICAL
TRANSFORMERS

NEW SUBSURFACE
DISPOSAL SYSTEM
(SEE SHEET 9)

NEW SUBSURFACE
DISPOSAL SYSTEM RESERVE

RIVER DRIVE

CONNECT TO EXISTING GAS
SERVICE CONNECTION.
COORDINATE W/ GAS
COMPANNY

NEW ELECTRIC SERVICE
TO TRANSFORMERS

EXISTING GAS SERVICE

NEW WATER SERVICE (SIZING TO BE
FINALIZED PRIOR TO CONSTRUCTION.
REQUIRES APPROVAL BY GROTON UTILITIES)

CONNECT AT EXISTING
UTILITY POLE WITH A DROP
TO UNDERGROUND

ROUTE 12

OAKRIDGE ROAD

NEW WATER METER PIT

NEW 16" x 8" REDUCER

NEW CONNECTION TO EXISTING WATER
MAIN STUB WITH VALVE; COORDINATE
WITH GROTON UTILITIES

16" DI WATER

SERVICE CURB BOXES

16" DI WATER

15 0 15 30 45
SCALE IN FEET

NOTE: UTILITY SERVICE TRENCHES LOCATED WITHIN 25 FT OF THE SEPTIC SYSTEM SHALL BE BACKFILLED WITH NON-FREE DRAINING MATERIAL

PZC PERMIT #_____ DATE OF APPROVAL_____ EXPIRATION DATE_____

PZC CHAIRMAN OR SECRETARY

DATE

REV.	DESCRIPTION OF REVISION	DATE	APPR.
4	RESPONSE TO REVIEW COMMENTS	07/13/2023	SRM
3	RESPONSE TO REVIEW COMMENTS	06/21/2023	SRM
2	REVISED FER UPDATED LAYOUT	05/01/2023	SRM
1	REVISED FER UPDATED LAYOUT	04/06/2023	SRM

STATE OF CONNECTICUT
GEORGE F. ANDRESS JR.
No. 18281
LICENSED
PROFESSIONAL ENGINEER

Loureiro
Engineering Associates
Water • Facility Services • Laboratory

Loureiro Engineering Associates, Inc.
130 Bradley Street, Suite 1B, New Haven, CT 06510
Phone: 860-747-6181 • Fax: 860-747-8822
An Employee Owned Company • www.Loureiro.com

©Loureiro Engineering Associates, Inc.
All Rights Reserved 2022

SCALE 1" = 30'

COMM. NO. 045-C2.06

DRAWN BY ESF — DATE 04/06/2023

APPROVED BY SRM — DATE 04/06/2023

UTILITY PLAN

PREPARED FOR:

GALES FERRY INTERMODAL
1761 ROUTE 12, GALES FERRY, CONNECTICUT 06335

GALES FERRY INTERMODAL LLC
549 SOUTH STREET, QUINCY, MA 02169

DRAWING

C-6

SHEET NO. 8 — NO. OF SHEETS 19

V:\CT\GALES FERRY\ROUTE 12-1761\045C2.06 LOCAL PERMIT FOR STERLING BUILDING\DWGS\CIVIL\UTILITY PLAN.DWG Tab: PROJECT AREA UTILITY PLAN Saved: 7/13/2023 2:05 PM by ESFARMER Plotted: 7/13/2023 2:10 PM

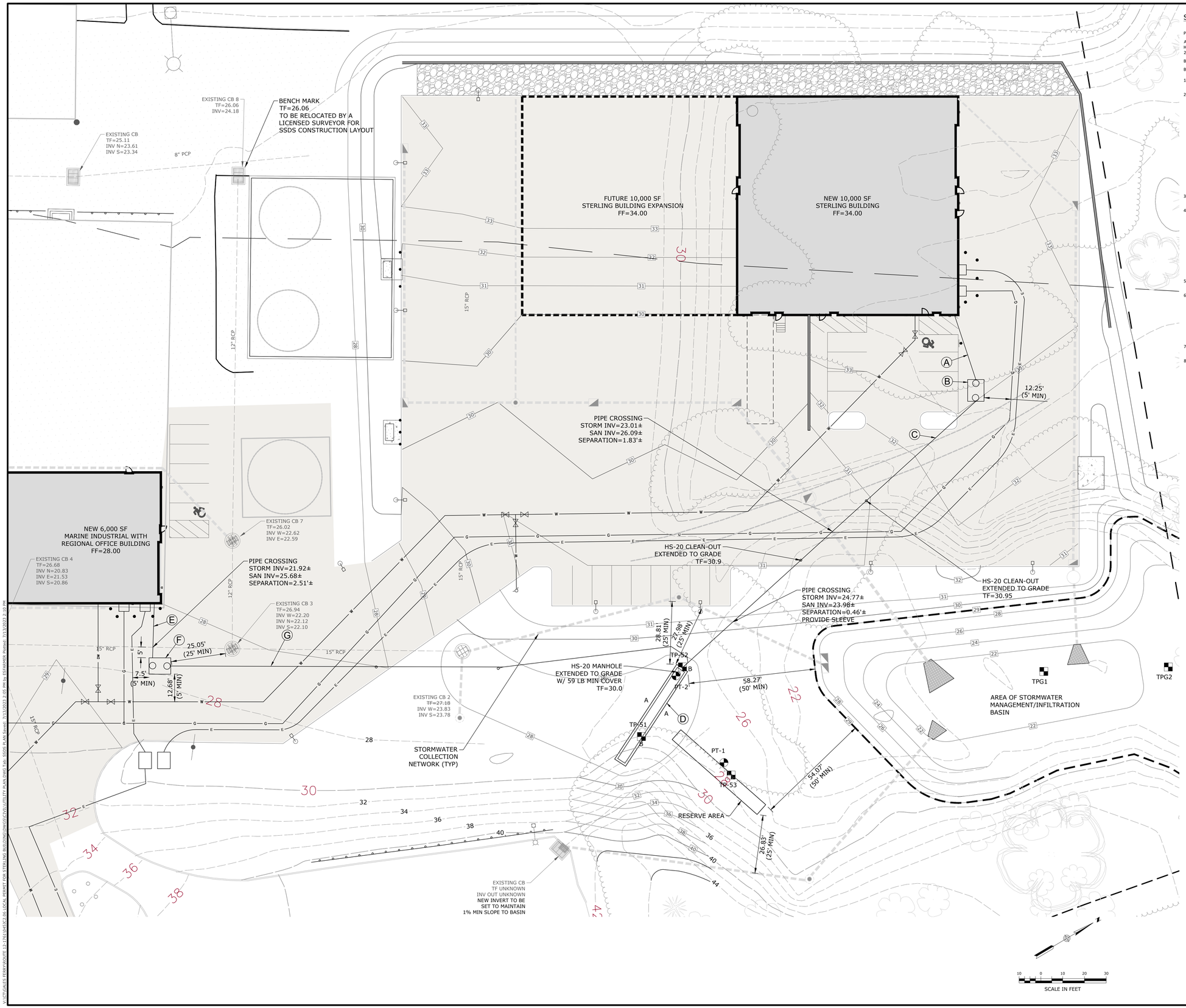

SUBSURFACE SEWAGE DISPOSAL SYSTEM (SSDS) BASIS OF DESIGN:

PLAN REFERENCES AND SITE NOTES

A. "PROPERTY AND TOPOGRAPHIC SURVEY PREPARED FOR STYRON LLC "ALLYN'S POINT PLANT" 1737 & 1761 MILITARY HIGHWAY - ROUTE 12, GALES FERRY, LEDYARD, CONNECTICUT PREPARED BY CME ASSOCIATES, IN. DATED SEPTEMBER 2, 2010

B. TOWN OF LEDYARD GIS - PUBLIC WATER IS AVAILABLE ON THIS SITE AND ALL ABUTTING PROPERTIES

BASIS OF DESIGN

1. SSDS DESIGN IS IN ACCORDANCE WITH THE CONNECTICUT PUBLIC HEALTH CODE, ON-SITE SEWAGE DISPOSAL REGULATIONS AND TECHNICAL STANDARDS FOR SUBSURFACE SEWAGE DISPOSAL SYSTEMS.

2. EQUIPMENT MAINTENANCE GARAGE - 10,000 SF:
   DESIGN FLOWS - 20,000 SQUARE FOOT (SF) EQUIPMENT MAINTENANCE GARAGE. NUMBER OF EMPLOYEES - 10. ASSUME TWO SHIFTS AS A REASONABLE FACTOR OF SAFETY ALLOCATING 20 EMPLOYEES AT 25 GALLONS PER DAY (GPD) PER EMPLOYEE. DESIGN FLOW - 500 GPD.
   THIS FACILITY WILL INCLUDE SERVICE TO THE PROJECT OWNER'S DREDGING EQUIPMENT. AS SUCH, THE ACTIVITY DOES NOT FIT THE INDUSTRIAL ALLOCATION. AS SUCH, THE DESIGN FLOW HAS BEEN CALCULATED BASED ON STAFFING. WE HAVE DOUBLED THE CALCULATED FLOWS ASSUMING A SECOND SHIFT. FURTHER, THE ORIGINAL DESIGN FOR THIS FACILITY INCLUDED A 20,000 SF BUILDING FOR THE SAME USE AND WE HAVE MAINTAINED THE SAME FLOW ESTIMATES FOR THE 10,000 SF BUILDING AS A FURTHER FACTOR OF SAFETY.
   REGIONAL OFFICE AND INDUSTRIAL STORAGE BUILDING - 6,000 SF:
   THIS FACILITY WILL INCLUDE THE SAME ACTIVITY AS THE ABOVE DESCRIBED FACILITY. IT INCLUDES A SMALL OFFICE, LAVETORY, AND DRIVE THROUGH EQUIPMENT SERVICE AREA. THIS FACILITY WILL HAVE A MAXIMUM OF FOUR EMPLOYEES, ASSUME TWO SHIFTS AS A REASONABLE FACTOR OF SAFETY ALLOCATING 8 EMPLOYEES AT 25 GALLONS PER DAY PER EMPLOYEE. DESIGN FLOW = 200 GPD.
   TOTAL DESIGN FLOW = 500 + 200 = 700 GPD

3. SEPTIC TANK REQUIRED - MINIMUM 1,000 GALLONS. SEPTIC TANK PROVIDED - 1,250 HS-20 DESIGNED FOR TRAFFIC AREAS FOR EACH BUILDING.

4. LEACHING SYSTEM DESIGN -USING 48-INCH CONCRETE LEACHING GALLEYS HS-20 DESIGNED FOR TRAFFIC AREA.
   PERCOLATION RATE = <10.0 MIN/INCH;
   APPLICATION RATE = 1.5 GPD/SF OF EFFECTIVE LEACHING AREA (ELA)
   ELA REQUIRED = 700 GPD/1.5 GPD/SF = 467 SF
   LEACHING SYSTEM: 48-INCH HIGH CONCRETE LEACHING GALLEYS = 9.2 SF/LF ELA
   ELA PROVIDED = THIRTEEN 4-FOOT LONG GALLEYS WITH 12-INCHES OF NO. 4 CRUSHED STONE AROUND
   52-FEET OF GALLEYS PLUS 2-FEET OF CRUSHED STONE AT THE ENDS
   54-FEET X 9.2 SF/LF ELA = 496 SF ELA

5. ALL FILL AND TOPSOIL WITHIN FIVE FEET SURROUNDING THE LEACHING SYSTEM AREA SHALL BE REMOVED AND REPLACED WITH SUITABLE SELECT FILL AS NEEDED.

6. MLSS:
   AVERAGE DEPTH TO RESTRICTIVE LAYER:
   CATEGORY 2
   NATIVE SOIL = 55"
   55" + 24" OF SELECT FILL = 79" > 60"
   NO MLSS REQUIRED

7. CONNECTICUT DEPARTMENT OF PUBLIC HEALTH REVIEW AND APPROVAL WILL BE REQUIRED SINCE TWO BUILDINGS WILL BE SERVED BY ONE SUBSURFACE SEWAGE DISPOSAL SYSTEM.

8. THE CONSTRUCTION OF THE FUTURE 10,000 SF BUILDING ADDITION WILL REQUIRE A B100a APPLICATION AND REVIEW FROM LEDGE LIGHT HEALTH DISTRICT.

SEPTIC SYSTEM KEY

A	30 L.F. 4" SCH. 40 PVC ASTM D1785 BUILDING SEWER PIPE INSTALLED @ ¼" PER FT. MIN. SLOPE AND 12" MIN. COVER
B	1,250-GALLON HS-20 CONCRETE SEPTIC TANK
C	182 L.F. 4" SCH 40 PVC ASTM D1785 DISTRIBUTION PIPE INSTALLED @ 1% MIN. SLOPE
D	(1) ROW OF 48" HIGH HS-20 CONCRETE LEACHING GALLEYS @ 52 L.F. TOTAL WITH 1' CRUSHED NO. 4 STONE AROUND ALL SIDES
E	25 L.F. 4" SCH 40 PVC ASTM D1785 BUILDING SEWER PIPE INSTALLED @ ¼" PER FT. MIN. SLOPE AND 12" MIN. COVER
F	1,250-GALLON HS-20 CONCRETE SEPTIC TANK
G	238 L.F. 4" SCH 40 PVC ASTM D1785 DISTRIBUTION PIPE INSTALLED @ 0.98% MIN. SLOPE

REFER TO SYSTEM INVERT TABLE ON THIS SHEET FOR PROPOSED INVERT ELEVATIONS.

SEPTIC SYSTEM B INVERT SCHEDULE

BUILDING SEWER INVERT		30.00
SEPTIC TANK STRUCTURE	TOP BOTTOM	30.66 25.95
SEPTIC TANK INVERTS	IN OUT	29.37 29.12
LEACHING GALLEYS	TOP BOTTOM	23.75 19.75
LEACHING GALLEY INVERT		22.92

SEPTIC SYSTEM F INVERT SCHEDULE

BUILDING SEWER INVERT		26.10
SEPTIC TANK STRUCTURE	TOP BOTTOM	26.92 22.22
SEPTIC TANK INVERTS	IN OUT	25.58 25.33

NO. 4 STONE AGGREGATE

AKA 1 & ¼" STONE	
SIEVE SIZE	PERCENT PASSING (BY WEIGHT)
2"	100
1 ½"	90-100
1"	20-55
¾"	0-15
½"	N/A
⅜"	0-5
#4	N/A
#40	0-3
#200	0-1 ½

SELECT FILL

SIEVE SIZE	PERCENT PASSING (BY WEIGHT)	
	WET SIEVE	DRY SIEVE
#4	100	100
#10	70-100	70-100
#40	10-50*	10-75
#100	0-20	0-5
#200	0-5	0-2.5

* PERCENT PASSING THE #40 SIEVE CAN BE INCREASED TO NO GREATER THAN 75 IF THE PERCENT PASSING THE #100 SIEVE DOES NOT EXCEED 10 AND THE #200 SIEVE DOES NOT EXCEED 5.

PZC PERMIT #_____ DATE OF APPROVAL_____ EXPIRATION DATE_____

PZC CHAIRMAN OR SECRETARY DATE

REV.	DESCRIPTION OF REVISION	DATE	APPR.
4	RESPONSE TO REVIEW COMMENTS	07/13/2023	SRM
3	RESPONSE TO REVIEW COMMENTS	06/21/2023	SRM
2	REVISED PER UPDATED LAYOUT	05/01/2023	SRM
1	REVISED PER UPDATED LAYOUT	04/06/2023	SRM

STATE OF CONNECTICUT GEORGE F. ANDRESKI No. 18281 LICENSED PROFESSIONAL ENGINEER

Loureiro Engineering Associates, Inc.
Environmental • Geotechnical • Civil • Site Dev
Water • Facility Services • Laboratory
Loureiro Engineering Associates, Inc.
100 Pennsylvania Avenue, Norwich, CT 06360
Phone: 860-747-6181 • Fax: 860-747-8822
An Employee Owned Company • www.Loureiro.com
©Loureiro Engineering Associates, Inc.
All Rights Reserved 2022

SCALE 1"=20'
COMP. NO. 0453LC2.06
DRAWN BY ESF
DATE 04/06/2023
APPROVED BY SRM
DATE 04/06/2023

SUBSURFACE SEWAGE DISPOSAL SYSTEM PLAN

GALES FERRY INTERMODAL
1761 ROUTE 12, GALES FERRY, CONNECTICUT 06335

PREPARED FOR:
GALES FERRY INTERMODAL LLC
549 SOUTH STREET, QUINCY, MA 02169

DRAWING
C-7

SHEET NO. 9 NO. OF SHEETS 19

V:\CT\GALES FERRY\ROUTE 12-1761\0453C2.06 LOCAL PERMIT FOR STERLING BUILDING\DWGS\CIVIL\UTILITY PLAN.DWG Tab: SSDS PLAN Saved: 7/13/2023 2:05 PM by ESFARMER Plotted: 7/13/2023 2:10 PM

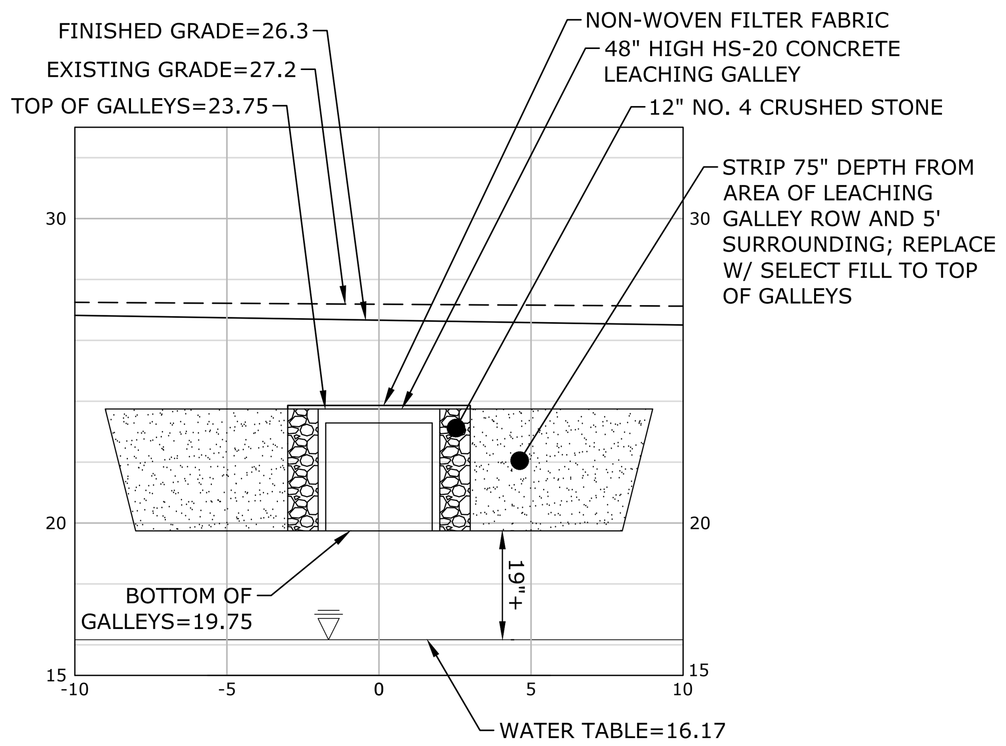

A-A SECTION VIEW

SCALE: 1"=5'H&V

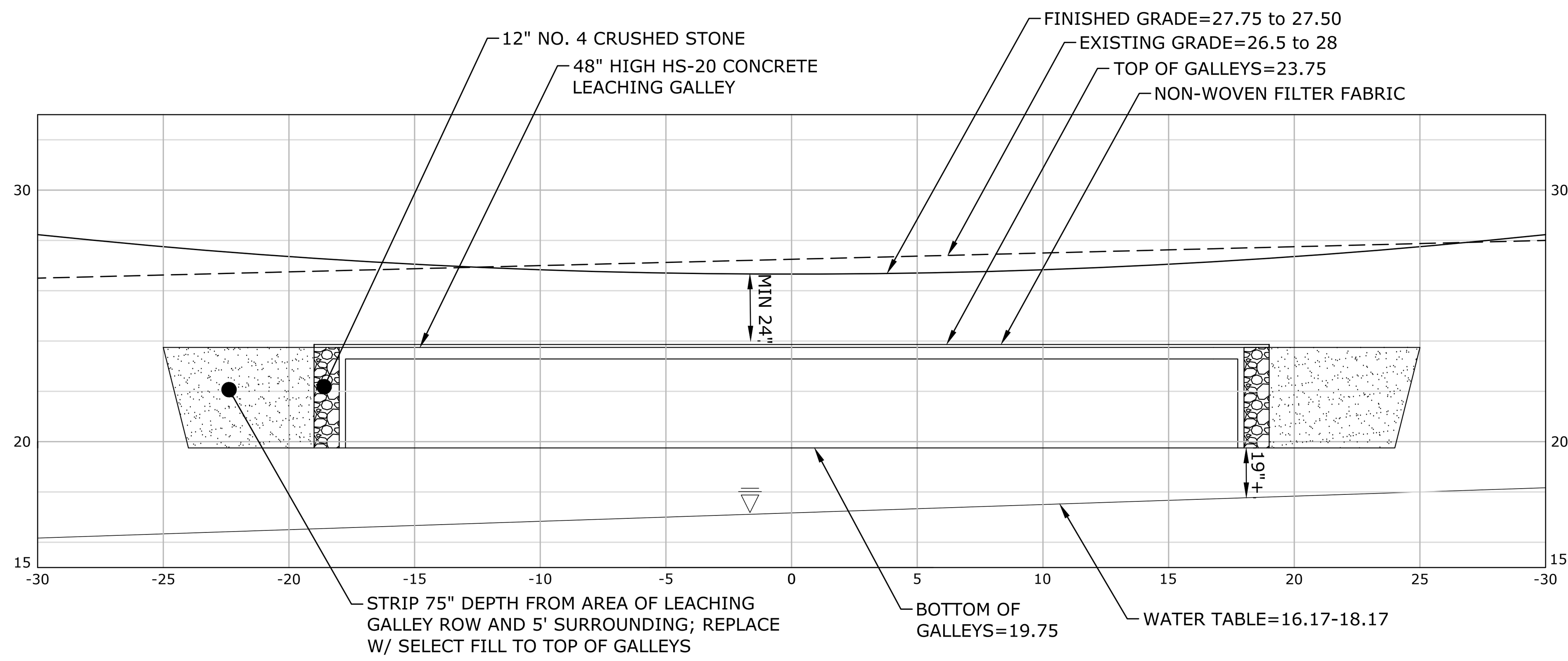

B-B SECTION VIEW

SCALE: 1"=5'H&V

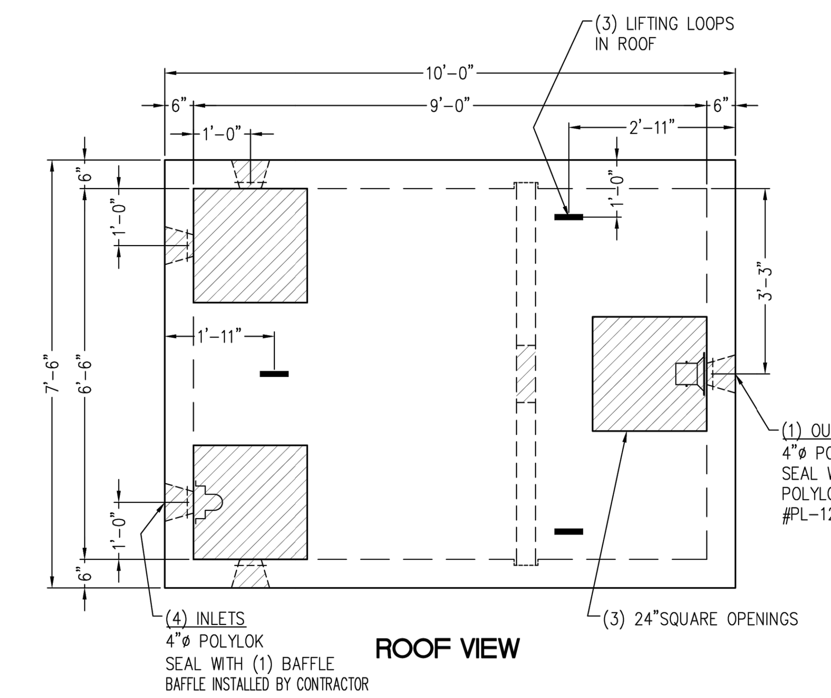

1,250 GALLON HS-20 SEPTIC TANK

TANK DESIGN SPECIFICATIONS CONFORMS TO LATEST: ASTM DESIGNATION C1227

NOTES:
1. JOINT SEALANT IS BUTYL RUBBER MASTIC TYPE SEAL THAT CONFORMS TO LATEST AASHTO SPEC. M-198.
4. REINFORCING STEEL DEFORMED BARS CONFORM TO LATEST ASTM SPEC. A706, GRADE 60, COVER 1½" UNLESS NOTED.
5. CONCRETE COMPRESSIVE STRENGTH-5,000 PSI AT 28 DAYS SELF CONSOLIDATING CONCRETE.
6. METHOD OF MANUFACTURE: WET CAST.
7. BOTTOM SECTION IS MONOLITHIC.
8. DESIGNED FOR AASHTO HS-20 LOADING WITH 6" to 60" OF SOIL COVER.
9. ALL PIPING PROVIDED AND INSTALLED BY CONTRACTOR.
10. LIFTING - LIFTING LOOPS IN ROOF SLING LIFTING NOTCHED IN BASE SECTION

WEIGHT CHART	
PRODUCT	APPROX. WEIGHT
TANK W/BAFFLE	24,900 LBS.

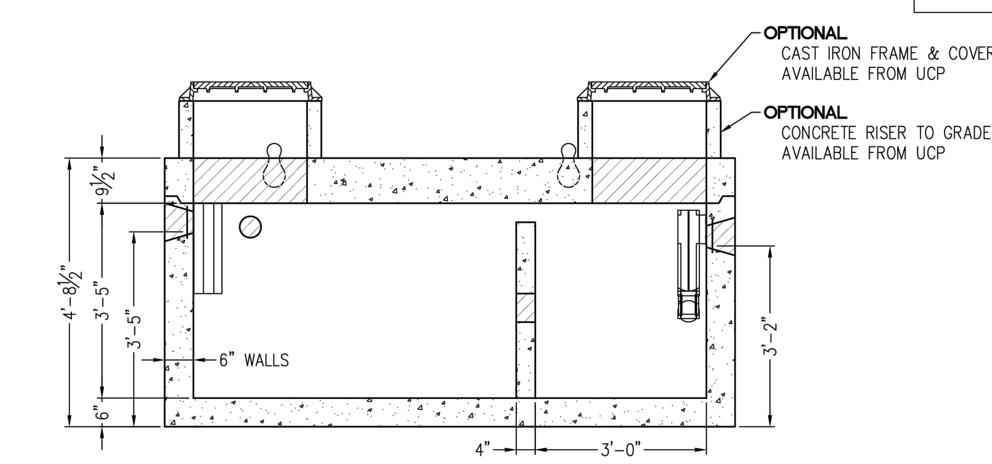

1,250 GALLON HS-20 SEPTIC TANK

NOT TO SCALE

PERCOLATION TEST RESULTS
CONDUCTED BY LOUREIRO ENGINEERING ASSOCIATES ON MARCH 24, 2023

PT-1
DEPTH: 122"

TIME (MIN)	MEASURE (INCHES)	RATE (MIN/IN)
0	5.75	---
1	7	0.80
2	8.25	0.80
3	8.75	2.0
4	9.125	2.7
5	9.5	2.7
6	10	2.0
7	10.375	2.7
8	10.75	2.7
9	11	4.0
10	11.5	2.0
11	11.875	2.7
12	12.125	4.0
13	12.375	4.0
14	12.5	8.0
15	13	2.0
16	13.125	8.0
17	13.25	8.0
18	13.5	4.0
19	13.75	4.0
20	14	4.0
21	14.25	4.0

<2" OF WATER REMAINING
PERC RATE = 4.0 MIN/INCH

PT-2
DEPTH: 108"

TIME (MIN)	MEASURE (INCHES)	RATE (MIN/IN)
0	11.5	---
1	12.5	1.0
2	13.5	1.0
3	14.375	1.1
4	15.125	1.3
5	15.875	1.3
6	16.375	2.0
7	17	1.6
8	17.5	2.0
	DRY	

PERC RATE = 2.0 MIN/INCH

TEST PIT LOG: TP-51
OBSERVED BY LOUREIRO ENGINEERING ASSOCIATES AND LEDGE LIGHT HEALTH DISTRICT ON MARCH 7, 2023

DEPTH	OBSERVATIONS
0-24"	GRAVEL, FILL
24"-68"	DARK BROWN FINE SANDY LOAM. CONCRETE DEBRIS W/ REBAR FOUND
68"-75"	BURIED TOPSOIL LAYER
75"-93"	TAN GREY FINE SANDY LOAM WITH GRAVEL
93"-150"	ORANGE BROWN MEDIUM-COARSE SAND AND GRAVEL W/ COBBLES

* ROOTS TO 93"
*GROUNDWATER AT 130"
*NO REFUSAL

TEST PIT LOG: TP-52
OBSERVED BY LOUREIRO ENGINEERING ASSOCIATES AND LEDGE LIGHT HEALTH DISTRICT ON MARCH 24, 2023

DEPTH	OBSERVATIONS
0-62"	FILL
62"-84"	ORIGINAL TOPSOIL
84"-111"	DARK BROWN MEDIUM-COARSE SAND WITH GRAVEL AND COBBLES
111"-150"	TAN MEDIUM SAND, SOME GRAVEL

*ROOTS TO 62"
*GROUNDWATER AT 130"
*NO REFUSAL
*NO MOTTLING

TEST PIT LOG: TP-53
OBSERVED BY LOUREIRO ENGINEERING ASSOCIATES AND LEDGE LIGHT HEALTH DISTRICT ON MARCH 24, 2023

DEPTH	OBSERVATIONS
0-79"	FILL
79"-105"	ORIGINAL TOPSOIL
105"-128"	ORANGE BROWN MEDIUM-COARSE SAND WITH GRAVEL AND COBBLES

*ROOTS TO 105"
*GROUNDWATER AT 128"
*NO REFUSAL
*NO MOTTLING

SUBSURFACE SEWAGE DISPOSAL SYSTEM (SSDS) CONSTRUCTION NOTES:

1) REFER TO SOIL EROSION AND SEDIMENT CONTROL PLAN FOR EROSION PROTECTION.

2) PROCEDURES FOR THE INSTALLATION OF FILL:

2.1) NO EXCAVATION SHALL OCCUR PRIOR TO NOTIFYING "CALL-BEFORE-YOU-DIG" AT 1-800-922-4455 OR 811.

2.2) INSTALL EROSION CONTROL ALONG THE DOWN-GRADIENT LIMITS OF FILL IN ACCORDANCE WITH THE SOIL EROSION AND SEDIMENT CONTROL PLAN.

2.3) STRIP ALL VEGETATION, ORGANIC MATTER AND UNSUITABLE OVERBURDEN INCLUDING THE BURIED TOPSOIL TO A DEPTH OF 75-INCHES BELOW GRADE IN THE AREA OF AND TEN FEET SURROUNDING THE NEW LEACHING SYSTEM. REMOVE ANY UNSUITABLE MATERIAL WHICH MAY INTERFERE WITH THE PROPER FUNCTION OF THE SYSTEM.

2.4) SCARIFY THE SURFACE IN THE PROPOSED LEACHING SYSTEM AREA PRIOR TO PLACING ANY SELECT FILL MATERIAL. AVOID COMPACTING THE SCARIFIED AREA. FILL SHALL NOT BE PLACED OVER SNOW OR FROZEN GROUND. DISCONTINUE FILL PLACEMENT DURING HEAVY RAINFALL AND A MINIMUM OF 24 HOURS THEREAFTER.

2.5) SELECT FILL SHALL BE PLACED WITHIN OR ADJACENT TO THE LEACHING SYSTEM PER THE PLAN AND SHALL MEET THE REQUIREMENTS OF SECTION VIII.A OF THE TECHNICAL STANDARDS. SELECT FILL SHALL BE PLACED TO THE TOP OF THE PROPOSED LEACHING GALLEYS AND SHALL EXTEND A MINIMUM OF FIVE FEET LATERALLY IN ALL DIRECTIONS BEYOND THE OUTER PERIMETER OF THE LEACHING SYSTEM AND TO DEPTHS INDICATED IN THE CROSS SECTION. THE SELECT FILL MATERIAL SHALL BE PLACED IN 12" LIFTS AND COMPACTED TO 90% DENSITY.

2.6) A SIEVE ANALYSIS FROM A SOIL TESTING LABORATORY SHALL BE PROVIDED TO LEDGE LIGHT HEALTH DISTRICT FOR ALL SELECT FILL MATERIAL TO DEMONSTRATE COMPLIANCE WITH THE TECHNICAL STANDARDS.

2.7) NATIVE SOIL OR COMMON FILL SHALL BE USED AS BACKFILL BEYOND THE LIMITS OF SELECT FILL AND BELOW THE TOPSOIL LAYER.

3) NO UTILITIES SHALL BE INSTALLED THROUGH ANY PORTION OF THE LEACHING SYSTEM.

4) SEPTIC TANK SHALL BE SET LEVEL ON A MINIMUM OF SIX INCHES OF PROCESSED AGGREGATE OR BROKEN STONE PLACED ON COMPACTED SUBGRADE. BACKFILL AROUND THE TANK SHALL BE PLACED AND COMPACTED IN SIX INCH LIFTS.

5) HS-20 SEPTIC TANK SHALL BE EQUIPPED WITH RISERS TO GRADE EQUIPPED WITH CAST IRON MANHOLE COVERS WITH A MINIMUM WEIGHT OF 59 POUNDS EQUIPPED WITH A LOCKING FEATURE.

6) THE NEW SSDS SHALL BE STAKED BY A LICENSED SURVEYOR AND A BENCH MARK SHALL BE ESTABLISHED AT THE LOCATION SHOWN ON THE SSDS PLAN.

7) THE INSTALLER SHALL SUBMIT TO LEDGE LIGHT HEALTH DISTRICT UPON 30 DAYS OF COMPLETION SCALED OR TIED AS-BUILT DRAWINGS OF ALL SSDS COMPONENTS. THE DRAWING SHALL INCLUDE THE NAME OF THE INSTALLER, DATE AND PROPERTY LOCATION/ADDRESS.

8) ALL STORM AND/OR ROOF DRAINS WITHIN 25 FEET OF THE SEPTIC SYSTEM SHALL BE TIGHT PIPE WITH NO FREE-DRAINING BEDDING MATERIAL IN TRENCH.

9) UTILITY TRENCHES LOCATED WITHIN 25 FT OF THE SEPTIC SYSTEM SHALL BE BACKFILLED WITH NON-FREE DRAINING MATERIAL.

10) ALL TANKS REQUIRING RISERS SHALL MAINTAIN THE ORIGINAL COVERS ON THE TANKS, OR INSTALL A SECONDARY SAFETY DEVICE IN THE RISER TO PREVENT INDIVIDUALS FROM FALLING INTO TANK. ALL BELOW GRADE TANK OR RISER COVER HANDLES SHALL CONTAIN OR BE FILLED WITH A MATERIAL THAT CAN BE LOCATED WITH A METAL DETECTOR.

4'x4'x4' GALLEY HS-20 LEACHING CHAMBER

GALLEY DESIGN SPECIFICATIONS CONFORMS TO LATEST: ASTM DESIGNATION C913

NOTES:
1. PIPE INLET LOCATIONS HAVE 4" DIAMETER KNOCKOUTS, TYPICAL. CUSTOM KNOCKOUTS CAN BE CAST ON REQUEST.
2. REINFORCING STEEL DEFORMED BARS CONFORM TO LATEST ASTM SPECIFICATION A615.
3. CONCRETE COMPRESSIVE STRENGTH- 4000 PSI AT 28 DAYS.
4. METHOD OF MANUFACTURE: WET CAST.
5. SECTION IS MONOLITHIC.
6. THE GALLEY IS DESIGNED FOR HS-20 LOADING w/18" OF SOIL COVER.

WEIGHT CHART

PRODUCT	APPROX WEIGHT
4'x4'x4' GALLEY	2200 LBS.

LEACHING DATA

FLOW LINE (INCHES)	LEACHING (Gal/LF)	LEACHING (FT^2/UNIT)	INSIDE CAPACITY (GALLONS)
38	9.2	36.8	330

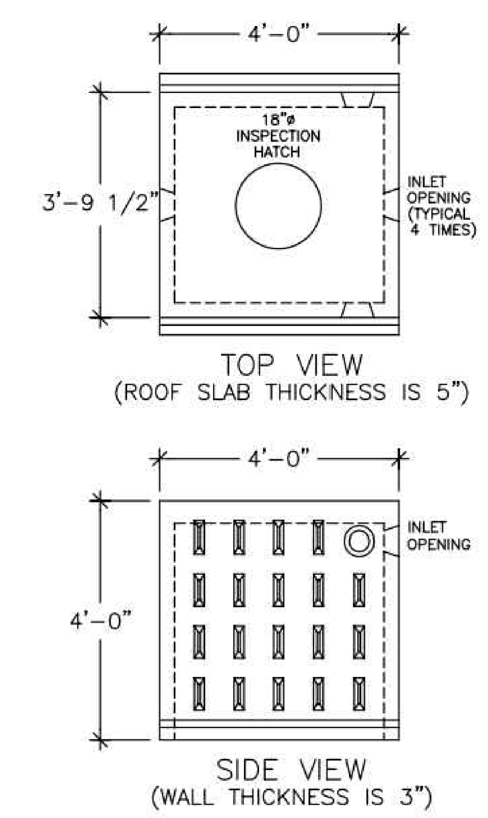

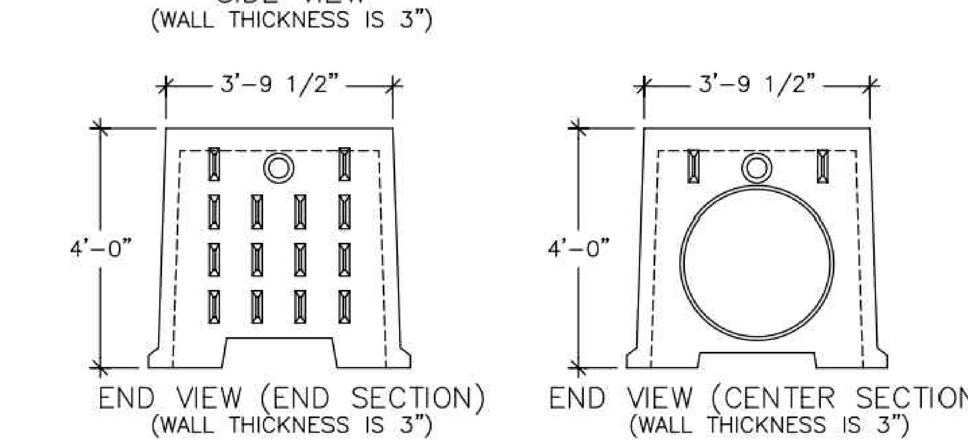

48" HIGH HS-20 LEACHING GALLEY

NOT TO SCALE

PZC PERMIT #__________ DATE OF APPROVAL__________ EXPIRATION DATE__________

PZC CHAIRMAN OR SECRETARY ________ DATE ________

REV.	DESCRIPTION OF REVISION	DATE	APPR.
4	RESPONSE TO REVIEW COMMENTS	07/13/2023	SRM
3	RESPONSE TO REVIEW COMMENTS	06/21/2023	SRM
2	REVISED PER UPDATED LAYOUT	05/01/2023	SRM
1	REVISED PER UPDATED LAYOUT	04/06/2023	SRM

STAMP: STATE OF CONNECTICUT GEORGE F. ANDREWS JR. No. 19286 LICENSED PROFESSIONAL ENGINEER

Loureiro
Engineering • Construction • EH&S • Energy
Waste • Facility Services • Laboratory
Loureiro Engineering Associates, Inc.
100 Northwest Drive • Plainville, Connecticut 06062
Phone: 860-747-6181 • Fax: 860-747-8822
An Employee Owned Company • www.Loureiro.com

©Loureiro Engineering Associates, Inc. All Rights Reserved 2023

SCALE (CLICK TO SELECT)
COMM. NO. 045JC2.06
DRAWN BY ESF DATE 04/06/2023
APPROVED BY SRM DATE 04/06/2023

SUBSURFACE SEWAGE DISPOSAL SECTIONS, DETAILS & NOTES

GALES FERRY INTERMODAL

1761 ROUTE 12, GALES FERRY, CONNECTICUT 06335

PREPARED FOR:

GALES FERRY INTERMODAL LLC

549 SOUTH STREET, QUINCY, MA 02169

DRAWING C-8

SHEET NO. 10 NO. OF SHEETS 19

V:\CT\GALES FERRY\ROUTE 12-1761\045JC2.06 LOCAL PERMIT FOR STERLING BUILDING\DWGS\CIVIL\UTILITY PLAN.DWG Tab: CROSS SECTIONS Saved: 7/13/2023 2:05 PM by ESFARMER Plotted: 7/13/2023 2:11 PM

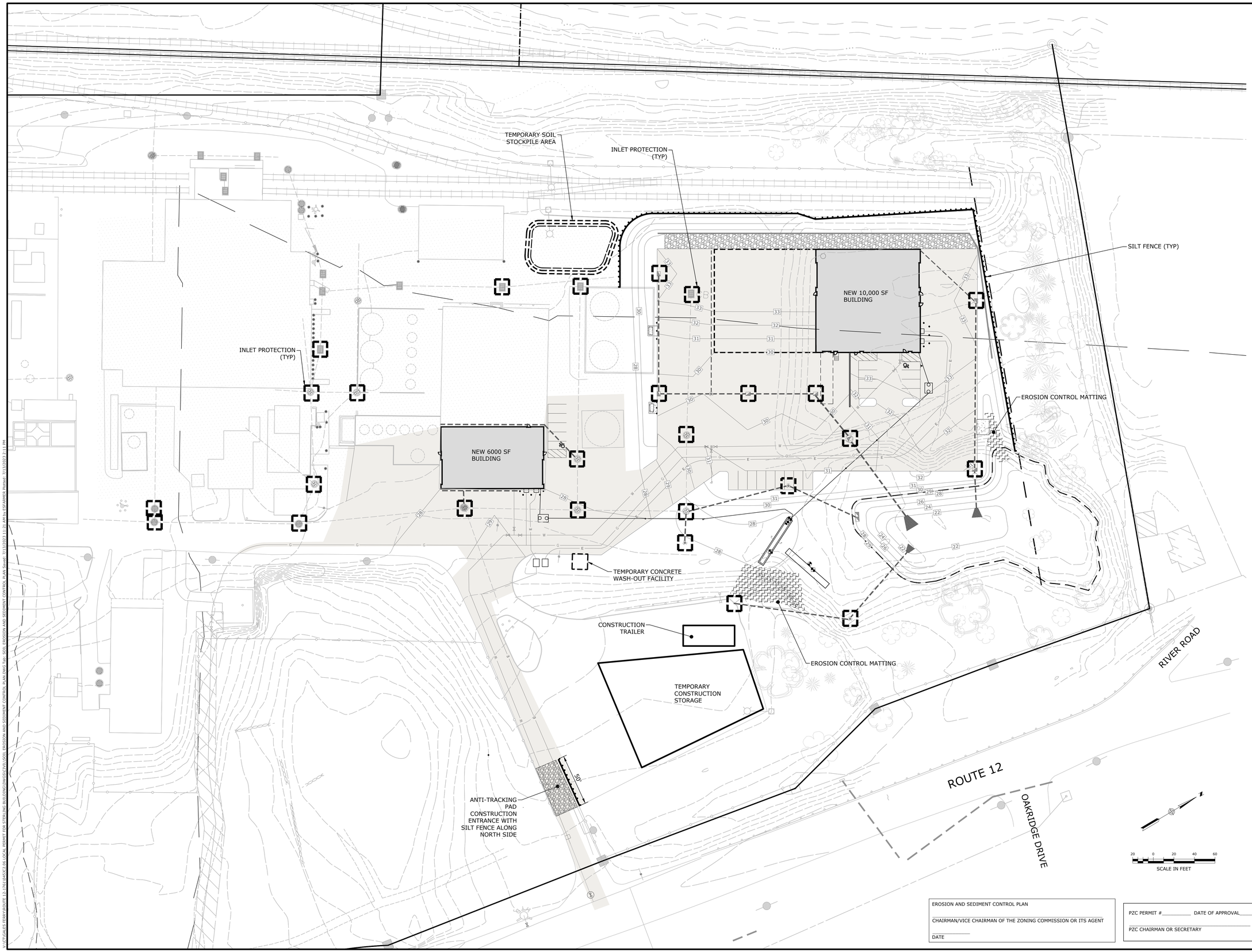

EROSION AND SEDIMENT CONTROL PLAN

CHAIRMAN/VICE CHAIRMAN OF THE ZONING COMMISSION OR ITS AGENT

DATE

PZC PERMIT #_____ DATE OF APPROVAL_____ EXPIRATION DATE_____

PZC CHAIRMAN OR SECRETARY DATE

REV.	DESCRIPTION OF REVISION	DATE	APPR.
4	RESPONSE TO REVIEW COMMENTS	07/13/2023	SRM
3	RESPONSE TO REVIEW COMMENTS	06/21/2023	SRM
2	REVISED PER UPDATED LAYOUT	05/01/2023	SRM
1	REVISED PER UPDATED LAYOUT	04/06/2023	SRM

STATE OF CONNECTICUT · GEORGE F. ANDRESS JR. · No. 19281 · LICENSED PROFESSIONAL ENGINEER

Loureiro
Engineering Associates, LLC
Water • Facility Services • Laboratory

Loureiro Engineering Associates, Inc.
1100 Boston Post Road, Guilford, Connecticut 06437
Phone: 860-747-6181 • Fax: 860-747-8822
An Employee Owned Company • www.Loureiro.com

©Loureiro Engineering Associates, Inc.
All Rights Reserved 2022

SCALE 1"=40'
CORM. NO. 0453-C2.06
DRAWN BY ESF DATE 04/06/2023
APPROVED BY SRM DATE 04/06/2023

SOIL EROSION AND SEDIMENT CONTROL PLAN

PREPARED FOR:

GALES FERRY INTERMODAL
1761 ROUTE 12, GALES FERRY, CONNECTICUT 06335

GALES FERRY INTERMODAL LLC
549 SOUTH STREET, QUINCY, MA 02169

DRAWING **C-9**

SHEET NO. 11 NO. OF SHEETS 19

V:\CT\GALES FERRY\ROUTE 12-1761\0453\C2.06 LOCAL PERMIT FOR STIRLING BUILDING\DWGS\CIVIL\SOIL EROSION AND SEDIMENT CONTROL PLAN DWG Tab: SOIL EROSION AND SEDIMENT CONTROL PLAN Saved: 7/13/2023 11:21 AM by ESFARMER Plotted: 7/13/2023 2:11 PM

PLANT SCHEDULE

KEY	QTY.	TECHNICAL NAME	COMMON NAME	SIZE	COND.
NS	2	NYSSA SYLVATICA	BLACK GUM	2"-2.5" CAL.	B&B
OV	7	OSTRYA VIRGINIANA	AMERICAN HOPHORNBEAM	2"-2.5" CAL.	B&B
IO	6	ILEX OPACA 'JERSEY PRINCESS'	AMERICAN HOLLY	6'-7' HT.	B&B
JV	17	JUNIPERUS VIRGINIANA	RED CEDAR	5'-6' HT.	B&B
PO	9	PHYSOCARPUS OPULIFOLIUS ' RUBY SPICE'	NINEBARK	3 GAL.	CONT.
SO	22	SYMPHORICARPOS ORBICULATUS	CORALBERRY	3 GAL.	CONT.
AT	20	AMSONIA TABERNAEMONTANA 'BLUE ICE'	BLUE STAR	1 GAL.	CONT.
MB	28	MONARDA BRADBURNIA	EASTERN BEEBALM	1 GAL.	CONT.

GENERAL NOTES - LANDSCAPING:

1. AS CONSTRUCTION PROGRESSES, FINE GRADE AND SEED OR SOD AS SOON AS POSSIBLE TO REDUCE RUNOFF.
2. ALL PLANTING BEDS TO BE TOPSOILED TO A DEPTH OF 12".
3. IN ALL SHRUB BEDS TO RECEIVE MASS PLANTING, PROVIDE PINE BARK MULCH AS DETAILED. ESTABLISH A NEAT, SMOOTH EDGE BETWEEN MULCH AND LAWN.
4. ADJUSTMENTS IN THE LOCATIONS OF PLANT MATERIALS MAY BE NECESSARY DUE TO LOCATIONS OF UTILITIES. ADJUSTMENTS SHALL BE APPROVED BY THE OWNER'S REPRESENTATIVE.
5. PROVIDE AND INSTALL ALL PLANTS SHOWN ON THE PLANTING PLAN DRAWINGS; THE QUANTITIES IN THE PLANT LIST ARE PROVIDED FOR THE CONTRACTOR'S CONVENIENCE ONLY. IF DISCREPANCIES OCCUR, THE DRAWING SYMBOLS PREVAIL OVER THE PLANT LIST QUANTITIES.

PLANTING DETAIL - TYP

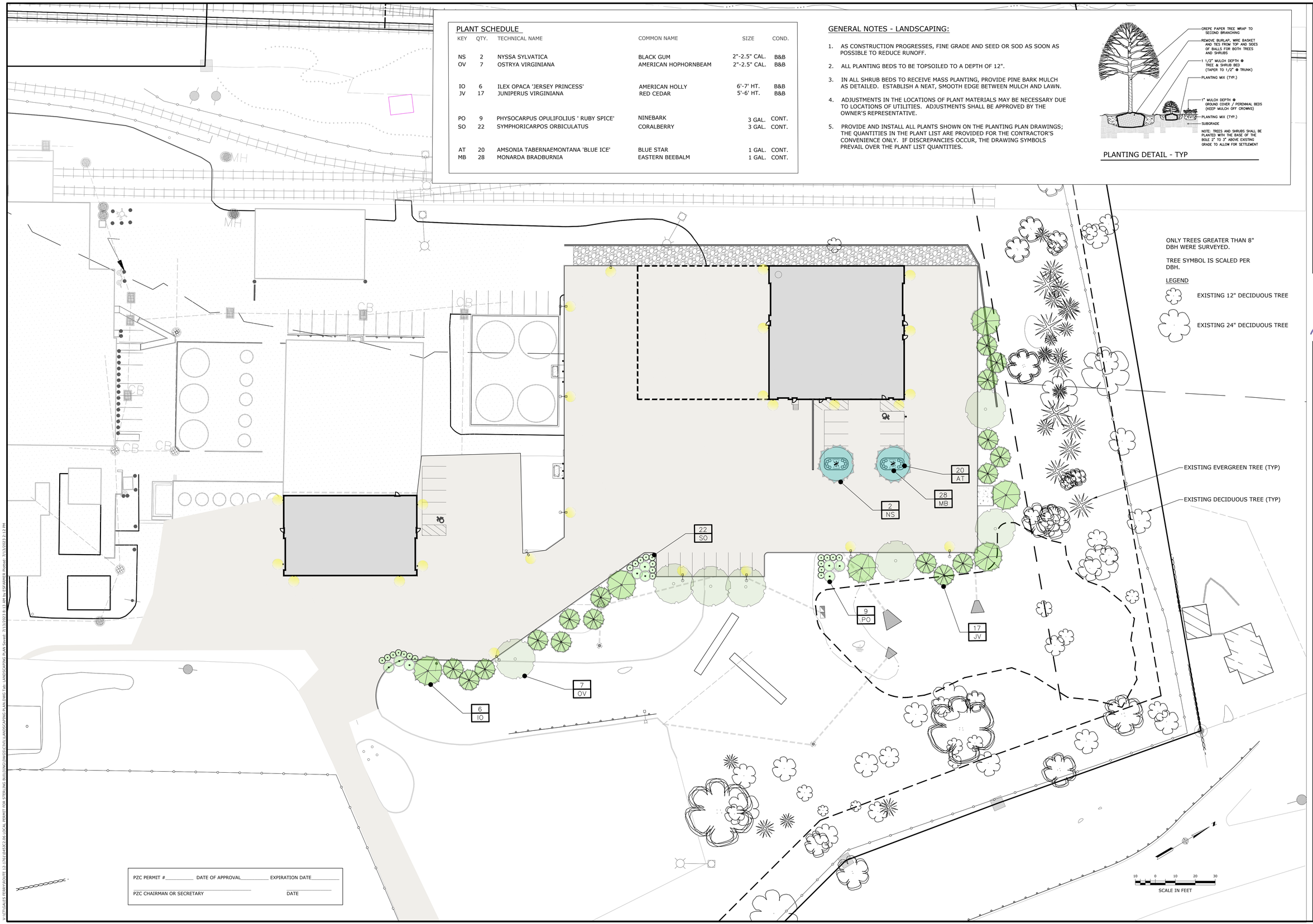

ONLY TREES GREATER THAN 8" DBH WERE SURVEYED.

TREE SYMBOL IS SCALED PER DBH.

LEGEND

EXISTING 12" DECIDUOUS TREE

EXISTING 24" DECIDUOUS TREE

PZC PERMIT #_____ DATE OF APPROVAL_____ EXPIRATION DATE_____

PZC CHAIRMAN OR SECRETARY DATE

REV.	DESCRIPTION OF REVISION	DATE	APPR.
4	RESPONSE TO REVIEW COMMENTS	07/13/2023	SRM
3	RESPONSE TO REVIEW COMMENTS	06/21/2023	SRM
2	REVISED PER UPDATED LAYOUT	05/01/2023	SRM
1	REVISED PER UPDATED LAYOUT	04/06/2023	SRM

STATE OF CONNECTICUT GEORGE F. ANDRESS No. 19281 LICENSED PROFESSIONAL ENGINEER

Loureiro
Engineering Associates, LLC
Water • Facility Services • Laboratory
Loureiro Engineering Associates, Inc.
100 Grandville Avenue, Suite 1 • Suffield, CT 06078-2502
Phone: 860-747-6181 • Fax: 860-747-8822
An Employee Owned Company • www.Loureiro.com

©Loureiro Engineering Associates, Inc.
All Rights Reserved 2022

SCALE: NOT TO SCALE
COMM. NO.: 0453C2.06
DRAWN BY: ESF — DATE: 04/06/2023
APPROVED BY: SRM — DATE: 04/06/2023

LANDSCAPING PLAN

PREPARED FOR:

GALES FERRY INTERMODAL LLC
1761 ROUTE 12, GALES FERRY, CONNECTICUT 06335

GALES FERRY INTERMODAL LLC
549 SOUTH STREET, QUINCY, MA 02169

DRAWING
L-1

SHEET NO. 12 — NO. OF SHEETS 19

V:\CT\GALES FERRY\ROUTE 12-1761\0453C2.06 LOCAL PERMIT FOR STERLING BUILDING\DWGS\CIVIL\LANDSCAPING PLAN.DWG Tab: LANDSCAPING PLAN Saved: 7/13/2023 8:13 AM by ESFARMER Plotted: 7/13/2023 2:12 PM

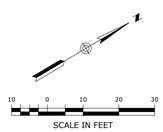

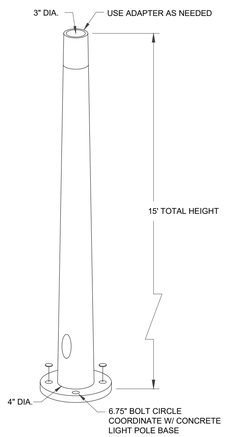

NOTE: COORDINATE POLE WITH BASE.

TAPERED ALUMINUM LUMINAIRE POLE

SCALE: NONE

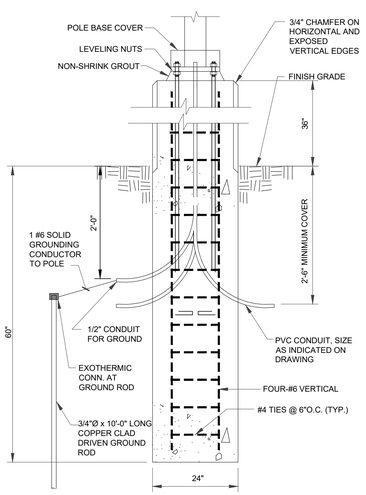

NOTES
1. CONCRETE SHALL BE 3000 PSI COMPRESSIVE STRENGTH AT 28 DAYS.
2. REINFORCING STEEL SHALL BE ASTM A615 GRADE 60.
3. LAP ALL BARS 36 BAR DIAMETERS.
4. GRIND AND GROUT CLEAN ALL EXPOSED CONCRETE SURFACES TO OBTAIN UNIFORM FINISH APPEARANCE.
5. BASE CAN BE CAST-IN-PLACE OR PRECAST AT CONTRACTOR'S OPTION.

LIGHT POLE BASE

SCALE: NONE

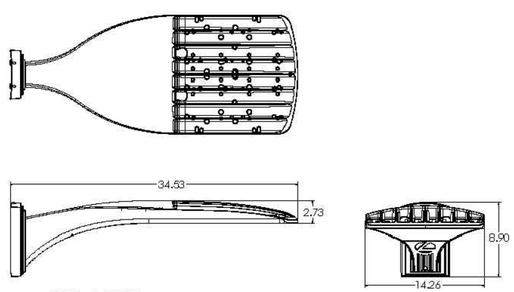

DSX1 with WBA

NOTES
LITHONIA LIGHTING, DSX1 LED WITH WBA, P2, 40K,T3M/TFTM, MVOLT, HS (POLE MOUNT).

POLE MOUNTED LIGHT

SCALE: NONE

WDGE3 LED
Architectural Wall Sconce

Specifications

Depth (D1): 8"
Depth (D2): 1.5"
Height: 9"
Width: 18"
Weight: (without options) 19.5 lbs

NOTES
LITHONIA LIGHTING COMMERCIAL OUTDOOR, WDGE3 LED ARCHITECTURAL WALL SCONCE FULL CUT OFF LUMINAIRE TO BE COORDINATED IN SHOP DRAWING TO REFLECT PHOTOMETRIC DISTRIBUTION SHOWN.

WALL PACK LIGHT

SCALE: NONE

SCHEDULE

SYMBOL	LABEL	QUANTITY	MANUFACTURER	CATALOG NUMBER	DESCRIPTION	NUMBER LAMPS	LUMENS PER LAMP	LIGHT LOSS FACTOR	WATTAGE
-	P3-TWX2	9	LITHONIA LIGHTING	TWX2 LED P3 40K	TWX2 LED WITH P3-PERFORMANCE PACKAGE, 4000K	1	5295	0.85	39.1538
	P2-T3M	11	LITHONIA LIGHTING	DSX1 LED P2 40K T3M MVOLT	DSX1 LED P2 40K T3M MVOLT	1	8641	0.85	70

STATISTICS

DESCRIPTION	SYMBOL	AVG	MAX	MIN	MAX/MIN	AVG/MIN
PARKING LOT	+	1.2 fc	7.6 fc	0.0 fc	N/A	N/A
PARKING LOT (BUILDING FRONT)	+	1.0 fc	5.2 fc	0.1 fc	52.0:1	10.0:1
PROPERTY LINE	+	0.0 fc	0.1 fc	0.0 fc	N/A	N/A

PZC PERMIT #_____ DATE OF APPROVAL_____ EXPIRATION DATE_____

PZC CHAIRMAN OR SECRETARY DATE

REV.	DESCRIPTION OF REVISION	DATE	APPR.
4	RESPONSE TO REVIEW COMMENTS	07/13/2023	SRM
3	RESPONSE TO REVIEW COMMENTS	06/21/2023	SRM
2	REVISED PER UPDATED LAYOUT	05/01/2023	SRM
1	REVISED PER UPDATED LAYOUT	04/06/2023	SRM

STATE OF CONNECTICUT
GEORGE F. ANDRESS JR.
No. 18281
LICENSED PROFESSIONAL ENGINEER

Loureiro
Engineering Associates
Water • Facility Services • Laboratory

Loureiro Engineering Associates, Inc.
1700 Main Street, Tewksbury, Massachusetts 01876
Phone: 860-747-6181 • Fax: 860-747-8822
An Employee Owned Company • www.Loureiro.com

©Loureiro Engineering Associates, Inc.
All Rights Reserved 2022

SCALE 1"=20'
COMM. NO. 045-C2.06
DRAWN BY ESF DATE 04/06/2023
APPROVED BY SRM DATE 04/06/2023

PHOTOMETRIC AND LIGHTING PLAN

PREPARED FOR:
GALES FERRY INTERMODAL
1761 ROUTE 12, GALES FERRY, CONNECTICUT 06335
PREPARED BY:
GALES FERRY INTERMODAL LLC
449 SOUTH STREET, QUINCY, MA 02169

DRAWING
C-10

SHEET NO. 13 NO. OF SHEETS 19

V:\CT\GALES FERRY\ROUTE 12-1761\045\C2.06 LOCAL PERMIT FOR STERLING BUILDING\DWGS\CIVIL\PHOTOMETRIC AND LIGHTING PLAN.DWG Tab: PHOTOMETRIC AND LIGHTING PLAN Saved: 7/13/2023 11:59 AM by ESFARMER Plotted: 7/13/2023 2:12 PM

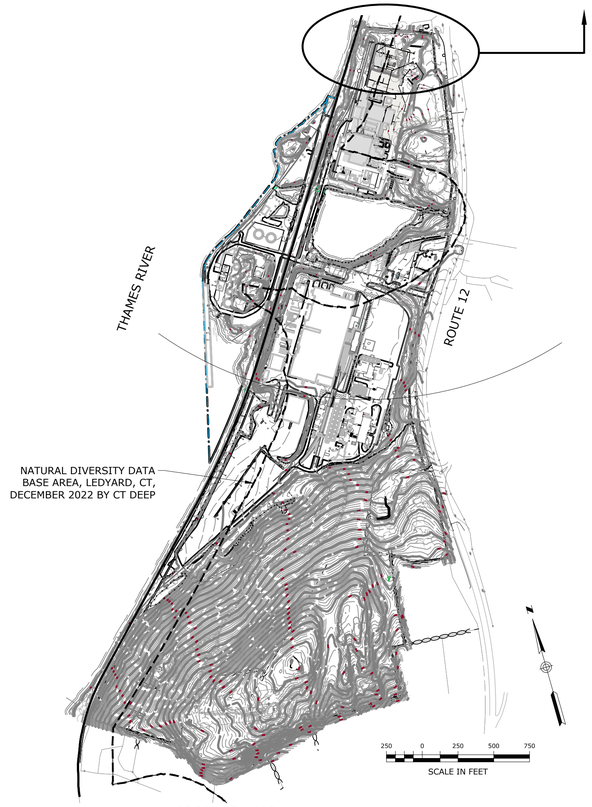

PROPERTY MAP

COASTAL RESOURCES

1. D- DEVELOPED SHOREFRONT: PORT AND HARBOR AREAS WHICH HAVE BEEN HIGHLY ENGINEERED AND DEVELOPED RESULTING IN THE FUNCTIONAL IMPAIRMENT OR SUBSTANTIAL ALTERATION OF THEIR NATURAL PHYSIOGRAPHIC FEATURES OR SYSTEMS.
2. W- WATER: OPEN WATER BODIES SUCH AS BUT NOT LIMITED TO LAKES AND PONDS SUBJECT TO REGULATION UNDER SECTIONS 22A-36 TO 22A-45 OF THE CONNECTICUT GENERAL STATUES.
3. T - REGULATED TIDAL WETLANDS: OFFICIAL STATE DESIGNATED AND REGULATED TIDAL WETLANDS LOCATED WITHIN THE COASTAL BOUNDARY. THE AREAS DEPICTED ON THIS MAP SHALL IN NO WAY SUPERSEDE THE OFFICIAL STATE REGULATED TIDAL WETLAND MAPS AT THE SCALE OF 1:2400.
4. COASTAL 'FLOOD' HAZARD AREA: 100 YEAR COASTAL FLOOD HAZARD AREA AS IDENTIFIED BY THE FEDERAL EMERGENCY MANAGEMENT AGENCY (FEMA). ON THOSE COASTAL ISLANDS CURRENTLY UNMAPPED BY FEMA, THE FLOOD HAZARD AREA IS CONSERVATIVELY APPROXIMATED BY THE 10' CONTOUR INTERVAL.
5. EM - ESTUARINE EMBAYMENTS: PROTECTED COASTAL WATER BODIES WITH AN OPEN CONNECTION TO THE SOUND INCLUDING TIDAL RIVERS, BAYS, COVES AND LAGOONS.
6. SHORELANDS: UPLAND AREAS AT ELEVATIONS IN EXCESS OF THE 100 YEAR STILL WATER FLOOD LEVEL AND LOCATED WITHIN THE COASTAL BOUNDARY.

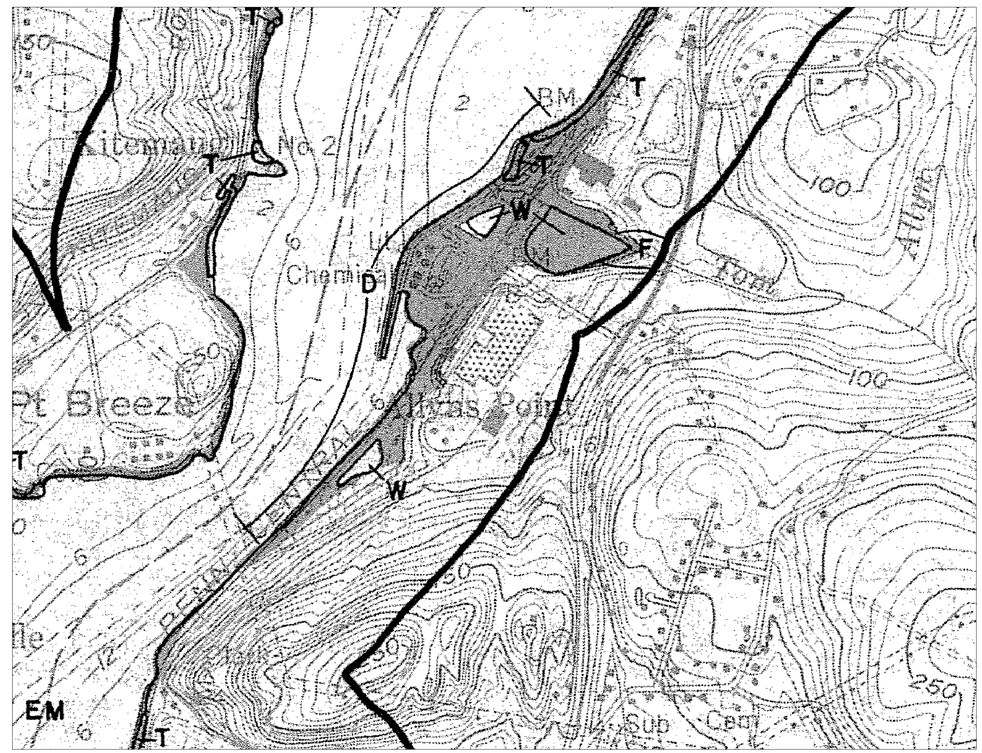

COASTAL RESOURCES

1979. PREPARED BY COASTAL AREA MANAGEMENT PROGRAM, CONNECTICUT DEPARTMENT OF ENVIRONMENTAL PROTECTION

PZC PERMIT #_____ DATE OF APPROVAL_____ EXPIRATION DATE_____

PZC CHAIRMAN OR SECRETARY _____ DATE _____

REV.	DESCRIPTION OF REVISION	DATE	APPR.
4	RESPONSE TO REVIEW COMMENTS	07/13/2023	SRM
3	RESPONSE TO REVIEW COMMENTS	06/21/2023	SRM
2	REVISED PER UPDATED LAYOUT	05/01/2023	SRM
1	REVISED PER UPDATED LAYOUT	04/06/2023	SRM

STATE OF CONNECTICUT
GEORGE F. ANDREWS
No. 19286
LICENSED
PROFESSIONAL ENGINEER

Loureiro
Engineering • Construction • ENGS • Energy
Waste • Facility Services • Laboratory
Loureiro Engineering Associates, Inc.
100 Northwest Drive • Plainville, Connecticut 06062
Phone: 860-747-6181 • Fax: 860-747-8822
An Employee Owned Company • www.Loureiro.com
©Loureiro Engineering Associates, Inc.
All Rights Reserved 2023

SCALE: SCALE AS NOTED
COMM. NO.: 045JC2.06
DRAWN BY: ESF DATE: 04/06/2023
APPROVED BY: SRM DATE: 04/06/2023

COASTAL AREA MANAGEMENT PLAN

GALES FERRY INTERMODAL
1761 ROUTE 12, GALES FERRY, CONNECTICUT 06335

PREPARED FOR:
GALES FERRY INTERMODAL, LLC
549 SOUTH STREET, QUINCY, MA 02169

DRAWING
C-11

SHEET NO. 14 NO. OF SHEETS 19

V:\CT\GALES FERRY\ROUTE 12-1761\045JC2.06 LOCAL PERMIT FOR STERLING BUILDING\DWGS\CIVIL\COASTAL AREA MANAGEMENT PLAN.DWG Tab: COASTAL AREA MANAGEMENT PLAN Saved: 7/13/2023 12:06 PM by ESFARMER Plotted: 7/13/2023 2:13 PM

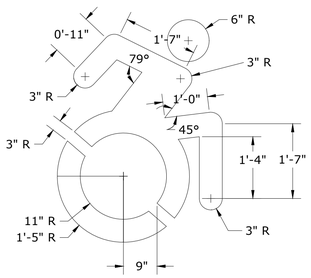

DYNAMIC ACCESSIBILITY PARKING SYMBOL®

SCALE: NONE

STOP SIGN:
R1-1; 31-0552-30"

SIGN DETAIL

SCALE: NONE

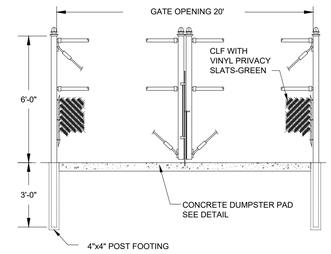

NOTES:
1. DUMPSTER ENCLOSURE TO BE EQUIPPED WITH VINYL PRIVACY SLATS - GREEN, ALL SIDES.
2. REFER TO CHAIN LINK FENCE DETAIL FOR ADDITIONAL DETAILS.
3. DEPTH OF THE ENCLOSURE IS 8'.

DUMPSTER ENCLOSURE DETAIL

SCALE: NONE

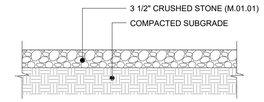

NOTES:
1. CRUSHED STONE SHALL CONSIST OF WASHED NO. 6 STONE AND SHALL BE IN ACCORDANCE WITH THE CONNECTICUT DEPARTMENT OF TRANSPORTATION SPECIFICATION SECTION M.01.01
2. ALL COMPACTION TO BE 95% STANDARD PROCTOR DENSITY

GRAVEL SURFACE X-SECTION

SCALE: NONE

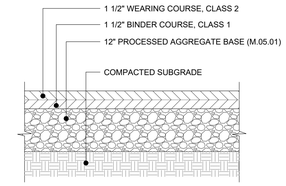

BITUMINOUS CONCRETE PAVING

SCALE: NONE

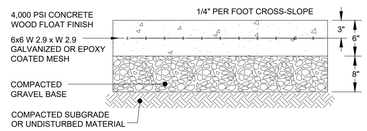

NOTE:
SEE PLAN FOR LOCATION AND SIZE OF PAD.

CONCRETE DUMPSTER PAD DETAIL

SCALE: NONE

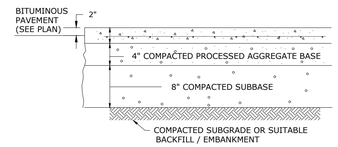

NOTES:
1. ALL COMPACTION TO BE 95% STANDARD PROCTOR DENSITY.
2. CONCRETE TO BE 3500 PSI COMPRESSIVE STRENGTH AT 28 DAYS.

CONCRETE PAD

SCALE: NONE

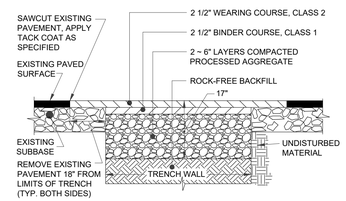

PAVEMENT REPLACEMENT DETAIL

SCALE: NONE

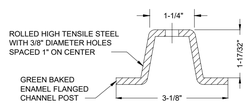

SECTION A-A

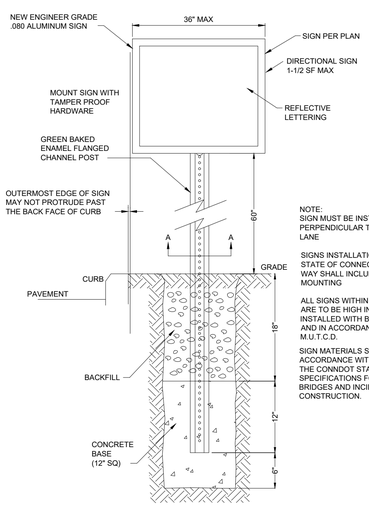

NOTE:
SIGN MUST BE INSTALLED PERPENDICULAR TO TRAVEL LANE

SIGNS INSTALLATIONS WITHIN THE STATE OF CONNECTICUT RIGHT OF WAY SHALL INCLUDE BREAKAWAY MOUNTING

ALL SIGNS WITHIN THE TOWN R.O.W. ARE TO BE HIGH INTENSITY PRISMATIC, INSTALLED WITH BREAKAWAY POSTS AND IN ACCORDANCE WITH THE M.U.T.C.D.

SIGN MATERIALS SHALL BE IN ACCORDANCE WITH SECTION M.18 OF THE CONNDOT STANDARD SPECIFICATIONS FOR ROADWAY, BRIDGES AND INCIDENTAL CONSTRUCTION.

SIGN POST

SCALE: NONE

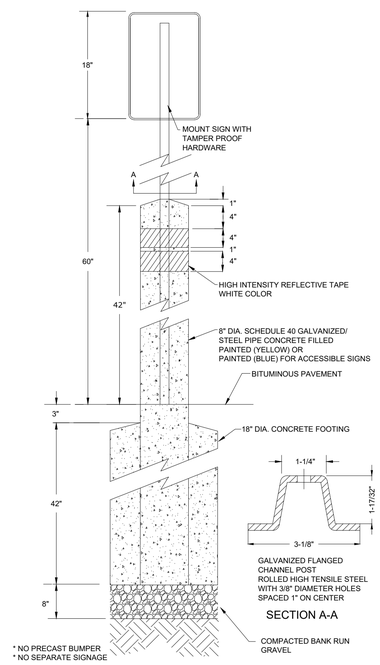

GALVANIZED FLANGED
CHANNEL POST
ROLLED HIGH TENSILE STEEL
WITH 3/8" DIAMETER HOLES
SPACED 1" ON CENTER

SECTION A-A

* NO PRECAST BUMPER
* NO SEPARATE SIGNAGE

BOLLARD MOUNTED SIGNAGE

SCALE: NONE

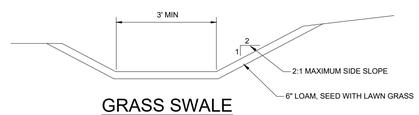

GRASS SWALE

SCALE: NONE

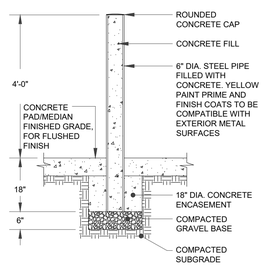

NOTE: CONCRETE: ACI301, 3000 PSI
COMPRESSIVE STRENGTH AT 28 DAYS

STEEL BOLLARD

SCALE: NONE

NOTES:

1. ALLOWABLE DESIGN STRESSES: CLASS "A" CONCRETE BASED ON f'c = 3000 psi. REINFORCEMENT: (ASTM A 615 GRADE 60) fs = 24000 psi
2. REINFORCEMENT COVER: ALL STEM REINFORCEMENT SHALL HAVE 2" COVER UNLESS OTHERWISE NOTED. ALL FOOTING REINFORCEMENT SHALL HAVE 3" COVER.
3. AFTER EXCAVATION CONTRACTOR SHOULD NOTIFY THE ENGINEER FOR THE INSPECTION OF THE EXISTING SOIL.
4. ALL REINFORCEMENT IN THE STEM, INCLUDING THE FOOTING DOWELS, SHALL BE EPOXY COATED.

GAS CYLINDER STORAGE LOCKER

SCALE: NONE

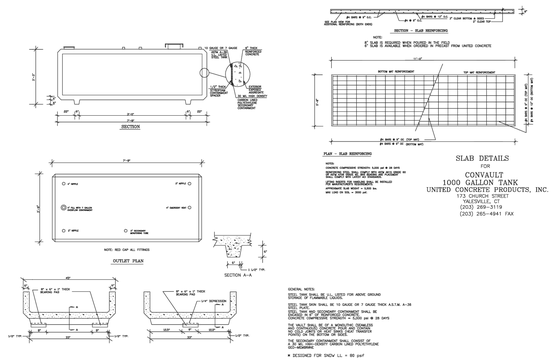

1,000 GAL DIESEL STORAGE TANK

SCALE: NONE

PZC PERMIT #_____ DATE OF APPROVAL_____ EXPIRATION DATE_____

PZC CHAIRMAN OR SECRETARY DATE

REV.	DESCRIPTION OF REVISION	DATE	APPR.
4	RESPONSE TO REVIEW COMMENTS	07/13/2023	SRM
3	RESPONSE TO REVIEW COMMENTS	06/21/2023	SRM
2	REVISED PER UPDATED LAYOUT	05/01/2023	SRM
1	REVISED PER UPDATED LAYOUT	04/06/2023	SRM

STATE OF CONNECTICUT
GEORGE F. ANDRESEN JR.
No. 18281
LICENSED PROFESSIONAL ENGINEER

Loureiro
Engineering Associates
Water • Facility Services • Laboratory
Loureiro Engineering Associates, Inc.
130 Bloomfield Avenue • Bloomfield, CT 06002
Phone: 860-747-6181 • Fax: 860-747-8822
An Employee Owned Company • www.Loureiro.com

©Loureiro Engineering Associates, Inc.
All Rights Reserved 2022

SCALE: NOT TO SCALE
CCRM. NO. 045-C2.06
DRAWN BY: ESF — DATE: 04/06/2023
APPROVED BY: SRM — DATE: 04/06/2023

SITE DETAILS 1

PREPARED FOR:
GALES FERRY INTERMODAL
1761 ROUTE 12, GALES FERRY, CONNECTICUT 06335
GALES FERRY INTERMODAL LLC
549 SOUTH STREET, QUINCY, MA 02169

DRAWING
C-12

SHEET NO. 15 — NO. OF SHEETS 19

V:\CT\GALES FERRY\ROUTE 12-1761\045C2.06 LOCAL PERMIT FOR STERLING BUILDING\DWGS\CIVIL\DETAILS.DWG Tab: SITE DETAILS 1 Saved: 7/12/2023 11:43 AM by ESFARMER Plotted: 7/13/2023 2:13 PM

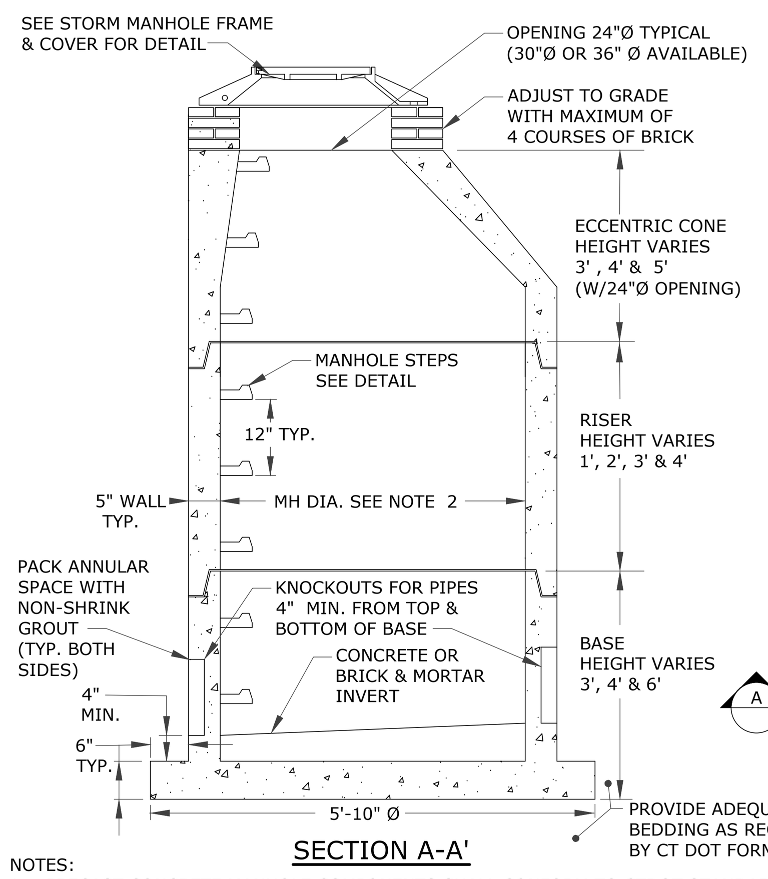

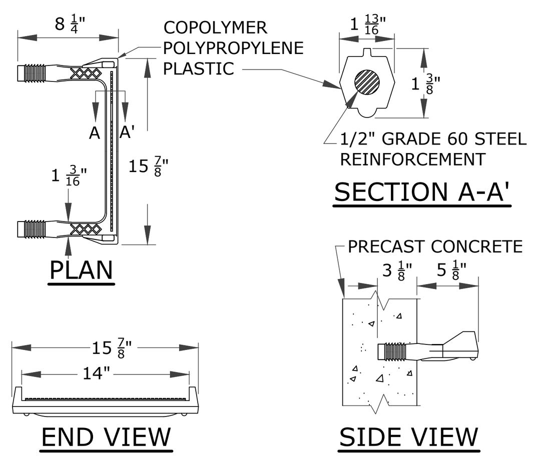

COPOLYMER POLYPROPYLENE PLASTIC STEEL REINFORCED MANHOLE STEP FOR CONCRETE MANHOLES

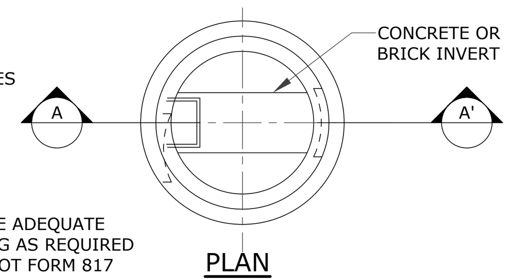

NOTES:
1. PRECAST CONCRETE MANHOLE COMPONENTS SHALL CONFORM TO CTDOT STANDARD SHEET HW-507_10 AS AMENDED.
2. 4', 5' OR 6' PRECAST CONCRETE BASE DIAMETERS MAY BE USED WHEN REQUIRED DUE TO SIZE OR NUMBER OF PIPES AT THE MANHOLE. PRECAST REDUCERS WILL BE PLACED ABOVE THE 5' AND 6' BASES AS DIRECTED BY THE ENGINEER. WALL THICKNESS SHALL INCREASE 1" FOR EACH 1' OF INSIDE DIAMETER INCREASE.
3. JOINT SEALANT SHALL BE BUTYL RUBBER MASTIC TYPE SEAL THAT CONFORMS TO LATEST AASHTO SPECIFICATION M-198 & MEETS FEDERAL SPECIFICATION SS-S-0021(210-A).
4. REINFORCING STEEL DEFORMED BARS ARE NOT SHOWN AND SHALL CONFORM TO LATEST CTDOT STANDARDS & SUPPLEMENTAL AND ASTM SPECIFICATION A615, GRADE 60, MINIMUM COVER 2", UNLESS OTHERWISE NOTED.
5. ALL PIPE OPENINGS SHALL BE CLOSED USING MATERIALS WHICH CONFORM TO STATE OF CT STANDARD SPECIFICATIONS SECTION M.08.02.
6. REINFORCING STEEL WELDED WIRE FABRIC SHALL CONFORM TO LATEST ASTM SPECIFICATION A185.
7. CONCRETE COMPRESSIVE STRENGTH SHALL BE MINIMUM 4000 PSI AT 28 DAYS, SELF COMPACTING CONCRETE MIX.
8. MANHOLE STEPS SHALL MEET LATEST OSHA REGULATIONS, (29 CFR 1910.27), SECTION 16 OF ASTM SPECIFICATION C478 AND SECTION 10 OF ASTM SPECIFICATION C497.
9. WHEN SPECIFIED, MANHOLES ARE TO BE COATED WITH BAY OIL, "EBONY".
10. METHOD OF MANUFACTURE SHALL BE WET CAST.
11. BASE SECTION IS MONOLITHIC.
12. MANHOLE INTERIOR DIAMETER:
    4'-0" FOR 8" TO 36" PIPE DIAMETERS
    5'-0" FOR 42" PIPE DIAMETER
    6'-0" FOR 48" PIPE DIAMETER.

STANDARD PRECAST CONCRETE STORM MANHOLE DETAIL

SCALE: NONE

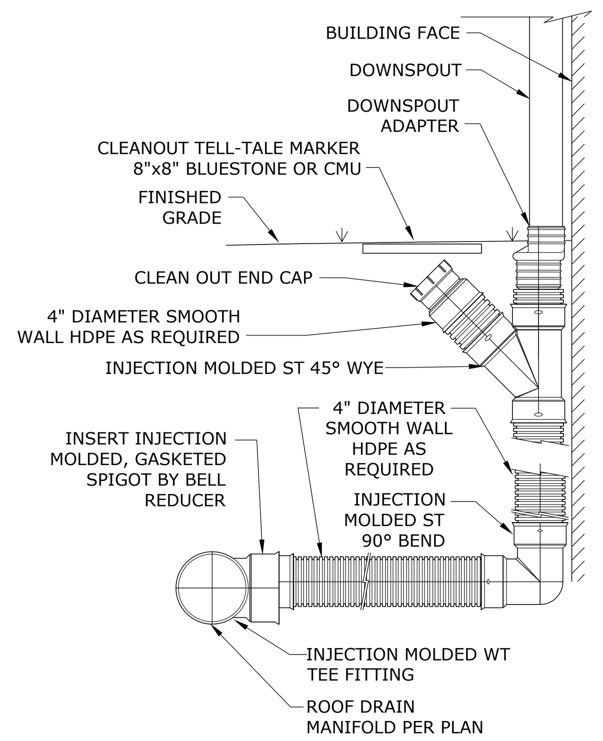

ROOF DRAIN DOWNSPOUT CONNECTION

SCALE: NONE

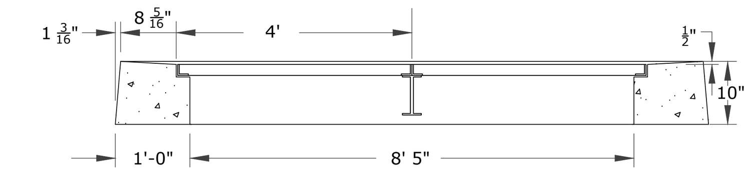

SECTION A - DOUBLE GRATE TYPE II "CL" TOP

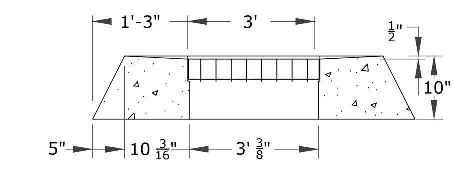

SECTION B - DOUBLE GRATE TYPE II "CL" TOP

NOTES:
1. CATCH BASIN TOPS, CURBS AND GRATE COMPONENTS SHALL CONFORM TO CTDOT FORM 817 STANDARD SPECIFICATION FOR ROADS, BRIDGES AND INCIDENTAL CONSTRUCTION AND CTDOT HIGHWAY STANDARD SHEETS HW-507_07 AND HW-507_08, AS AMENDED.
3. REINFORCING STEEL DEFORMED BARS ARE NOT SHOWN AND SHALL CONFORM TO LATEST CTDOT STANDARDS & SUPPLEMENTALS AND ASTM SPECIFICATION A615, GRADE 60, MINIMUM COVER 2" UNLESS OTHERWISE NOTED.
4. ALL STEEL, EXCEPT REINFORCING BARS, SHALL BE GALVANIZED IN CONFORMANCE WITH SECTION M06.03 OF CONNECTICUT STANDARD SPECIFICATIONS.
5. TYPE "C" CATCH BASIN DEPRESSED GUTTER STRIPS SHALL CONFORM TO CTDOT STANDARD SHEET HW-507_01, AS AMENDED.

DOUBLE GRATE TYPE II, OUTLET CONTROL STRUCTURE TOP DETAIL

SCALE: NONE

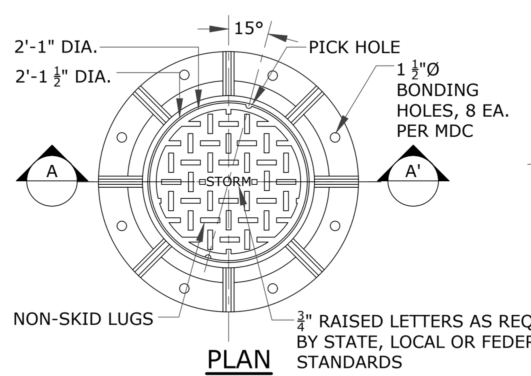

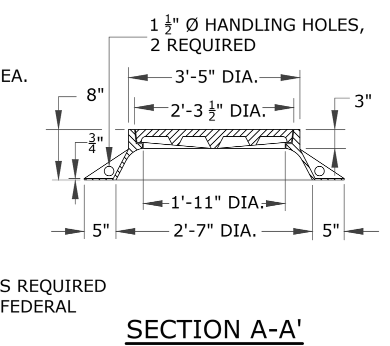

NOTES:
1. STORM MANHOLE FRAMES AND COVERS SHALL CONFORM TO CTDOT FORM 817 STANDARD SPECIFICATION FOR ROADS, BRIDGES AND INCIDENTAL CONSTRUCTION AND CT DOT HIGHWAY STANDARD SHEETS HW-507_10, AS AMENDED.
2. CHANNELS MAY BE SHAPED IN CONCRETE BASE OF MANHOLE OR FORMED USING BRICK OR MASONRY, UNLESS OTHERWISE DIRECTED.
2. A FRAME OF 3'-3" WITH 4" FLANGE SHALL BE USED WHEN THE TOP DIAMETER OF A PRECAST CONE IS LESS THAN 3'-6". ALL OTHER FRAME DIMENSIONS SHALL REMAIN THE SAME.
3. ALL DIMENSIONS SUBJECT TO MANUFACTURING TOLERANCES.

STORM MANHOLE FRAME & COVER DETAIL

SCALE: NONE

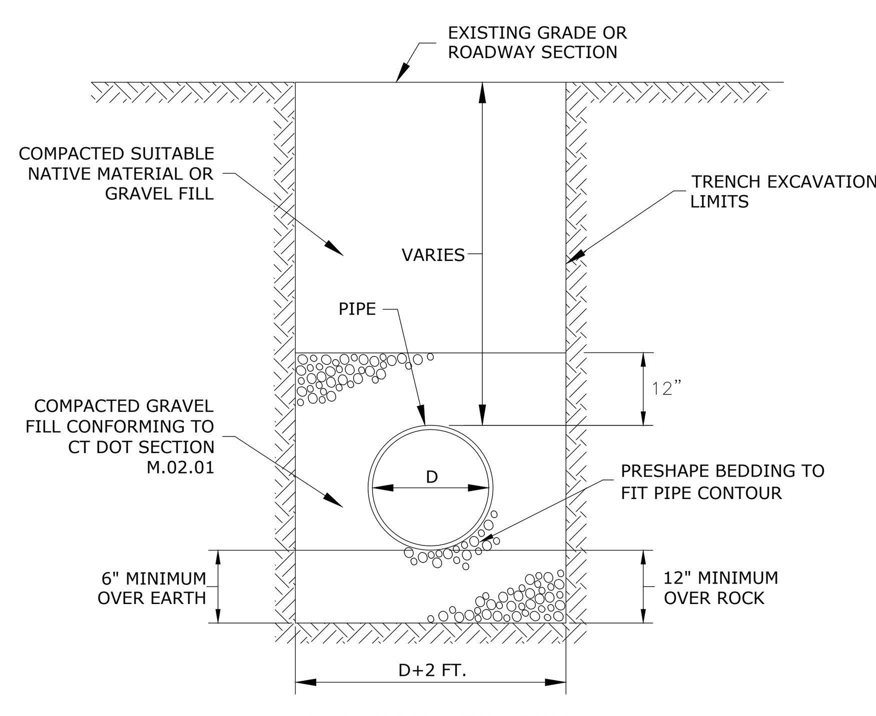

STORM DRAIN TRENCH

SCALE: NONE

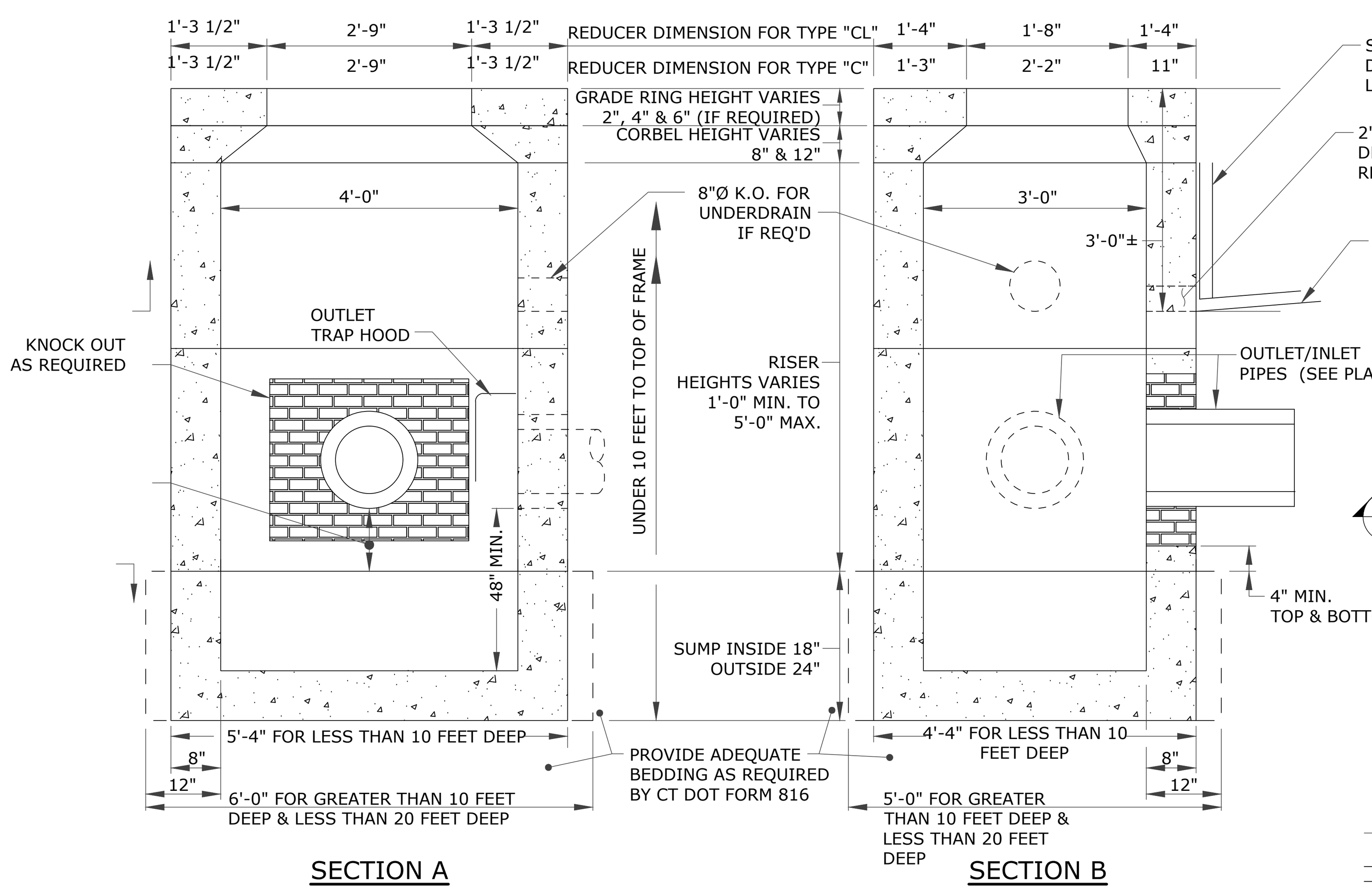

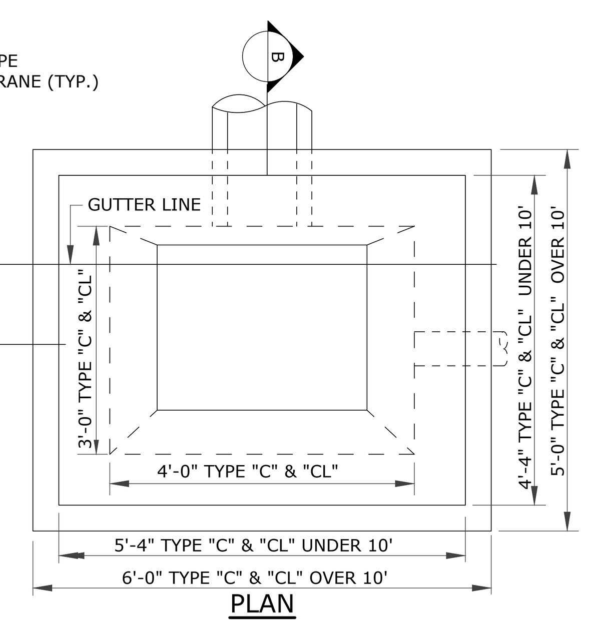

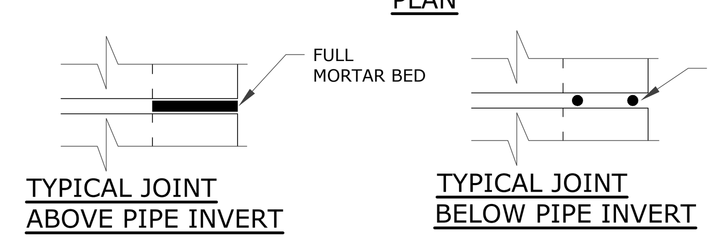

NOTES:

1. PRECAST CONCRETE CATCH BASIN COMPONENTS SHALL CONFORM TO CTDOT FORM 816 STANDARD SPECIFICATION FOR ROADS, BRIDGES AND INCIDENTAL CONSTRUCTION AND CTDOT HIGHWAY STANDARD SHEETS HW-507_04, AS AMENDED.
2. THIS DETAIL IS BASED ON CTDOT PRECAST CONCRETE TYPE "C" & "CL" CATCH BASIN COMPONENTS, (UNDER 10' DEEP SHOWN).
3. REINFORCING STEEL DEFORMED BARS ARE NOT SHOWN AND SHALL CONFORM TO LATEST CTDOT STANDARDS & SUPPLEMENTAL AND ASTM SPECIFICATION A615, GRADE 60, MINIMUM COVER 2" UNLESS OTHERWISE NOTED.
4. METHOD OF MANUFACTURE SHALL BE WET CAST.
5. SUMP SECTION SHALL BE MONOLITHIC.
6. DESIGN LOAD SHALL BE AASHTO H-20.

TYPE "C" & "C-L" PRECAST CONCRETE CATCH BASIN DETAIL

SCALE: NONE

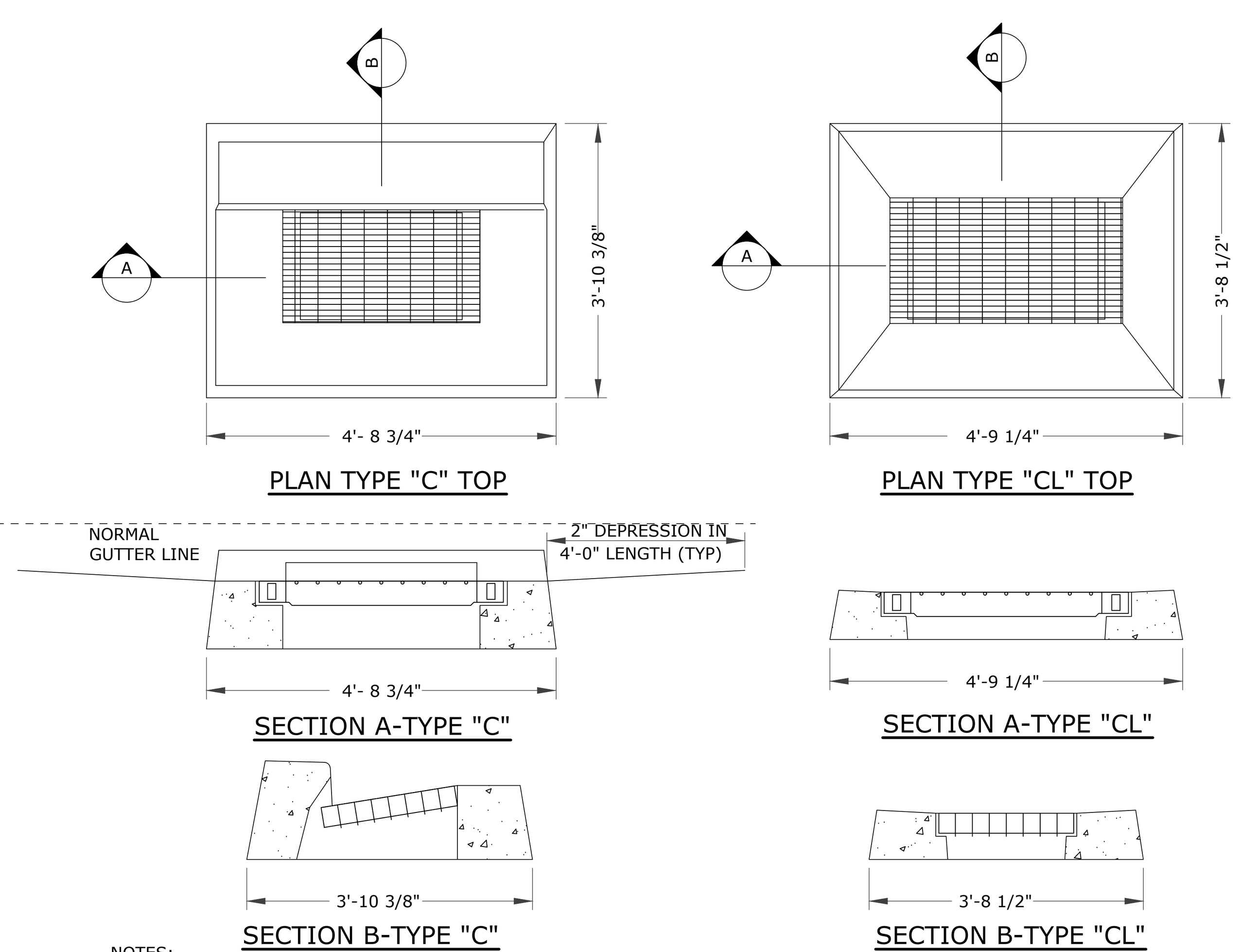

NOTES:

1. CATCH BASIN TOPS, CURBS AND GRATE COMPONENTS SHALL CONFORM TO CTDOT FORM 816 STANDARD SPECIFICATION FOR ROADS, BRIDGES AND INCIDENTAL CONSTRUCTION AND CTDOT HIGHWAY STANDARD SHEETS HW-507_07 AND HW-507_08, AS AMENDED.
2. REINFORCING STEEL DEFORMED BARS ARE NOT SHOWN AND SHALL CONFORM TO LATEST CTDOT STANDARDS & SUPPLEMENTAL AND ASTM SPECIFICATION A615, GRADE 60, MINIMUM COVER 2" UNLESS OTHERWISE NOTED.
3. ALL STEEL, EXCEPT REINFORCING BARS, SHALL BE GALVANIZED IN CONFORMANCE WITH SECTION M06.03 OF CONNECTICUT STANDARD SPECIFICATIONS.
4. TYPE "C" CATCH BASIN DEPRESSED GUTTER STRIPS SHALL CONFORM TO CTDOT STANDARD SHEET HW-507_01, APPROVED 07-21-2013.

TYPE "C" & "C-L" CATCH BASIN TOP DETAILS

SCALE: NONE

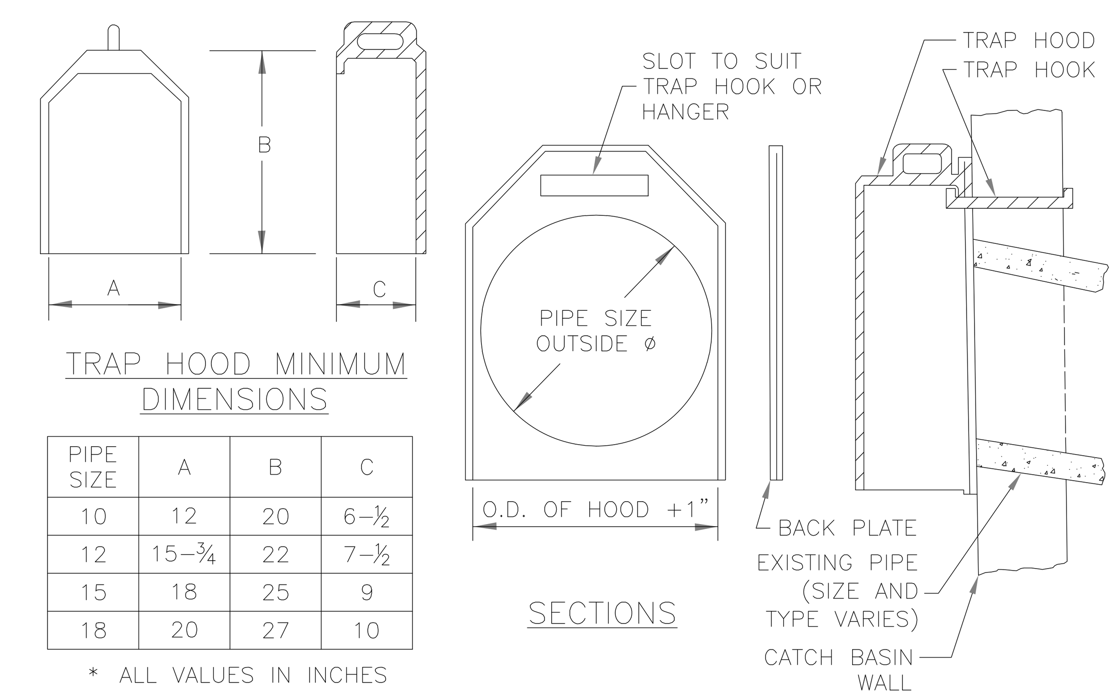

TRAP HOOD MINIMUM DIMENSIONS

PIPE SIZE	A	B	C
10	12	20	6-½
12	15-¾	22	7-½
15	18	25	9
18	20	27	10

* ALL VALUES IN INCHES

NOTES:
1. TRAP HOODS SHALL BE CAST IRON FOR 10", 12", 15" AND 18 PIPE SIZES AND FABRICATED ALUMINUM FOR 21" OR GREATER.
2. ALL TRAP HOODS SHALL INCLUDE STAINLESS STEEL HOOKS OR HANGERS FOR MOUNTING TO THE CATCH BASIN WALL. BACK PLATES SHALL BE FURNISHED ONLY WHEN REQUESTED.
3. TRAP HOODS SHALL BE FROM CAMPBELL FOUNDRY. NEENAH FOUNDRY, EAST JORDAN IRON WORKS OR APPROVED EQUAL. DIMENSIONS AND MODEL NUMBERS VARY BASED ON DISCHARGE PIPE SIZE AND MANUFACTURER.
4. SEE MANUFACTURER FOR INSTALLATION INSTRUCTIONS.

CATCH BASIN TRAP HOOD

SCALE: NONE

PZC PERMIT #__________ DATE OF APPROVAL__________ EXPIRATION DATE__________

PZC CHAIRMAN OR SECRETARY DATE

REV.	DESCRIPTION OF REVISION	DATE	APPR.
4	RESPONSE TO REVIEW COMMENTS	07/13/2023	SRM
3	RESPONSE TO REVIEW COMMENTS	06/21/2023	SRM
2	REVISED PER UPDATED LAYOUT	05/01/2023	SRM
1	REVISED PER UPDATED LAYOUT	04/06/2023	SRM

STAMP

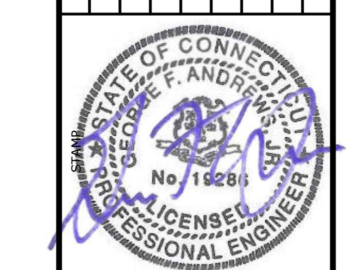

Loureiro
Engineering • Construction • EH&S • Energy
Waste • Facility Services • Laboratory
Loureiro Engineering Associates, Inc.
100 Northwest Drive • Plainville, Connecticut 06062
Phone: 860-747-6181 • Fax: 860-747-8822
An Employee Owned Company • www.Loureiro.com

©Loureiro Engineering Associates, Inc.
All Rights Reserved 2023

SCALE: NOT TO SCALE
COMM. NO. 045JC2.06
DRAWN BY: ESF DATE: 04/06/2023
APPROVED BY: SRM DATE: 04/06/2023

SITE DETAILS 2

GALES FERRY INTERMODAL
1761 ROUTE 12, GALES FERRY, CONNECTICUT 06335
PREPARED FOR:
GALES FERRY INTERMODAL LLC
549 SOUTH STREET, QUINCY, MA 02169

DRAWING C-13

SHEET NO. 16 NO. OF SHEETS 19

V:\CT\GALES FERRY\ROUTE 12-1761\045JC2.06 LOCAL PERMIT FOR STERLING BUILDING\DWGS\CIVIL\DETAILS.DWG Tab: SITE DETAILS 2 Saved: 7/12/2023 11:43 AM by ESFARMER Plotted: 7/13/2023 2:13 PM

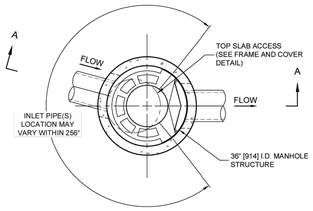

PLAN VIEW B-B
NOT TO SCALE

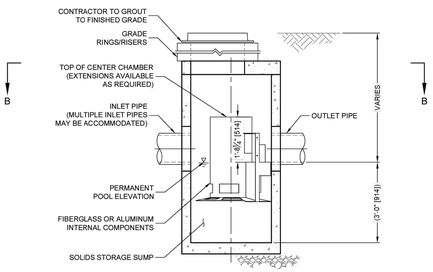

ELEVATION A-A
NOT TO SCALE

CASCADE separator™

CASCADE SEPARATOR DESIGN NOTES

THE STANDARD CS-3 CONFIGURATION IS SHOWN. ALTERNATE CONFIGURATIONS ARE AVAILABLE AND ARE LISTED BELOW. SOME CONFIGURATIONS MAY BE COMBINED TO SUIT SITE REQUIREMENTS.

CONFIGURATION DESCRIPTION
GRATED INLET ONLY (NO INLET PIPE)
GRATED INLET WITH INLET PIPE OR PIPES
CURB INLET ONLY (NO INLET PIPE)
CURB INLET WITH INLET PIPE OR PIPES

FRAME AND COVER
(DIAMETER VARIES)
NOT TO SCALE

SITE SPECIFIC DATA REQUIREMENTS

STRUCTURE ID			
WATER QUALITY FLOW RATE (cfs [L/s])			
PEAK FLOW RATE (cfs [L/s])			
RETURN PERIOD OF PEAK FLOW (yrs)			
RIM ELEVATION			
PIPE DATA:	INVERT	MATERIAL	DIAMETER
INLET PIPE 1			
INLET PIPE 2			
OUTLET PIPE			
NOTES / SPECIAL REQUIREMENTS:			

GENERAL NOTES
1. CONTECH TO PROVIDE ALL MATERIALS UNLESS NOTED OTHERWISE.
2. FOR SITE SPECIFIC DRAWINGS WITH DETAILED STRUCTURE DIMENSIONS AND WEIGHT, PLEASE CONTACT YOUR CONTECH ENGINEERED SOLUTIONS LLC REPRESENTATIVE. www.ContechES.com
3. CASCADE SEPARATOR WATER QUALITY STRUCTURE SHALL BE IN ACCORDANCE WITH ALL DESIGN DATA AND INFORMATION CONTAINED IN THIS DRAWING. CONTRACTOR TO CONFIRM STRUCTURE MEETS REQUIREMENTS OF PROJECT.
4. CASCADE SEPARATOR STRUCTURE SHALL MEET AASHTO HS20 LOAD RATING, ASSUMING EARTH COVER OF 0' - 2' [610], AND GROUNDWATER ELEVATION AT, OR BELOW, THE OUTLET PIPE INVERT ELEVATION. ENGINEER OF RECORD TO CONFIRM ACTUAL GROUNDWATER ELEVATION. CASTINGS SHALL MEET AASHTO M306 AND BE CAST WITH THE CONTECH LOGO.
5. CASCADE SEPARATOR STRUCTURE SHALL BE PRECAST CONCRETE CONFORMING TO ASTM C478 AND AASHTO LOAD FACTOR DESIGN METHOD.
6. ALTERNATE UNITS ARE SHOWN IN MILLIMETERS [mm].

INSTALLATION NOTES
A. ANY SUB-BASE, BACKFILL DEPTH, AND/OR ANTI-FLOTATION PROVISIONS ARE SITE-SPECIFIC DESIGN CONSIDERATIONS AND SHALL BE SPECIFIED BY ENGINEER OF RECORD.
B. CONTRACTOR TO PROVIDE EQUIPMENT WITH SUFFICIENT LIFTING AND REACH CAPACITY TO LIFT AND SET THE CASCADE SEPARATOR MANHOLE STRUCTURE.
C. CONTRACTOR TO INSTALL JOINT SEALANT BETWEEN ALL STRUCTURE SECTIONS AND ASSEMBLE STRUCTURE.
D. CONTRACTOR TO PROVIDE, INSTALL, AND GROUT INLET AND OUTLET PIPE(S). MATCH PIPE INVERTS WITH ELEVATIONS SHOWN. ALL PIPE CENTERLINES TO MATCH PIPE OPENING CENTERLINES.
E. CONTRACTOR TO TAKE APPROPRIATE MEASURES TO ASSURE UNIT IS WATER TIGHT, HOLDING WATER TO FLOWLINE INVERT MINIMUM. IT IS SUGGESTED THAT ALL JOINTS BELOW PIPE INVERTS ARE GROUTED.

CONTECH® ENGINEERED SOLUTIONS LLC
www.contechES.com
9025 Centre Pointe Dr., Suite 400, West Chester, OH 45069
800-338-1122 513-645-7000 513-645-7993 FAX

CS-3
CASCADE SEPARATOR
STANDARD DETAIL

I:\COMMON\CAD\TREATMENT\21 CASCADE\40 STANDARD DRAWINGS\DWG\CS-3-DTL.DWG 6/18/2020 4:23 PM

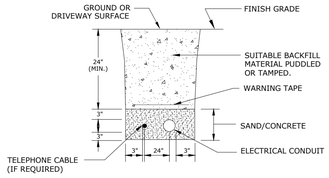

NOTE: NUMBER AND TYPE OF CONDUITS VARY

ELECTRICAL LINE TRENCH
SCALE: NONE

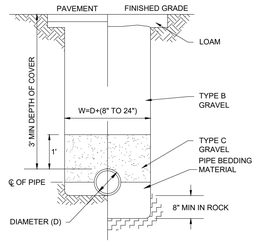

WATER LINE TRENCH
SCALE: NONE

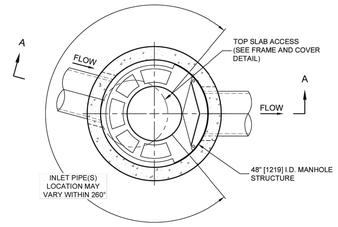

PLAN VIEW B-B
NOT TO SCALE

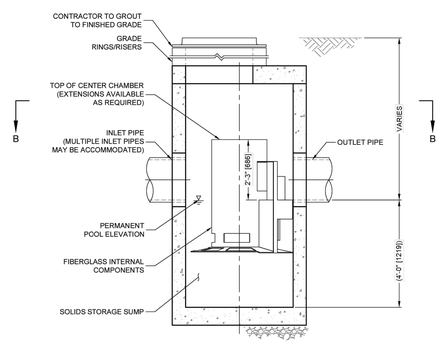

ELEVATION A-A
NOT TO SCALE

CASCADE separator™

CASCADE SEPARATOR DESIGN NOTES

THE STANDARD CS-4 CONFIGURATION IS SHOWN. ALTERNATE CONFIGURATIONS ARE AVAILABLE AND ARE LISTED BELOW. SOME CONFIGURATIONS MAY BE COMBINED TO SUIT SITE REQUIREMENTS.

CONFIGURATION DESCRIPTION
GRATED INLET ONLY (NO INLET PIPE)
GRATED INLET WITH INLET PIPE OR PIPES
CURB INLET ONLY (NO INLET PIPE)
CURB INLET WITH INLET PIPE OR PIPES

FRAME AND COVER
(DIAMETER VARIES)
NOT TO SCALE

SITE SPECIFIC DATA REQUIREMENTS

STRUCTURE ID			
WATER QUALITY FLOW RATE (cfs [L/s])			
PEAK FLOW RATE (cfs [L/s])			
RETURN PERIOD OF PEAK FLOW (yrs)			
RIM ELEVATION			
PIPE DATA:	INVERT	MATERIAL	DIAMETER
INLET PIPE 1			
INLET PIPE 2			
OUTLET PIPE			
NOTES / SPECIAL REQUIREMENTS:			

GENERAL NOTES
1. CONTECH TO PROVIDE ALL MATERIALS UNLESS NOTED OTHERWISE.
2. FOR SITE SPECIFIC DRAWINGS WITH DETAILED STRUCTURE DIMENSIONS AND WEIGHT, PLEASE CONTACT YOUR CONTECH ENGINEERED SOLUTIONS LLC REPRESENTATIVE. www.ContechES.com
3. CASCADE SEPARATOR WATER QUALITY STRUCTURE SHALL BE IN ACCORDANCE WITH ALL DESIGN DATA AND INFORMATION CONTAINED IN THIS DRAWING. CONTRACTOR TO CONFIRM STRUCTURE MEETS REQUIREMENTS OF PROJECT.
4. CASCADE SEPARATOR STRUCTURE SHALL MEET AASHTO HS20 LOAD RATING, ASSUMING EARTH COVER OF 0' - 2' [610], AND GROUNDWATER ELEVATION AT, OR BELOW, THE OUTLET PIPE INVERT ELEVATION. ENGINEER OF RECORD TO CONFIRM ACTUAL GROUNDWATER ELEVATION. CASTINGS SHALL MEET AASHTO M306 AND BE CAST WITH THE CONTECH LOGO.
5. CASCADE SEPARATOR STRUCTURE SHALL BE PRECAST CONCRETE CONFORMING TO ASTM C478 AND AASHTO LOAD FACTOR DESIGN METHOD.
6. ALTERNATE UNITS ARE SHOWN IN MILLIMETERS [mm].

INSTALLATION NOTES
A. ANY SUB-BASE, BACKFILL DEPTH, AND/OR ANTI-FLOTATION PROVISIONS ARE SITE-SPECIFIC DESIGN CONSIDERATIONS AND SHALL BE SPECIFIED BY ENGINEER OF RECORD.
B. CONTRACTOR TO PROVIDE EQUIPMENT WITH SUFFICIENT LIFTING AND REACH CAPACITY TO LIFT AND SET THE CASCADE SEPARATOR MANHOLE STRUCTURE.
C. CONTRACTOR TO INSTALL JOINT SEALANT BETWEEN ALL STRUCTURE SECTIONS AND ASSEMBLE STRUCTURE.
D. CONTRACTOR TO PROVIDE, INSTALL, AND GROUT INLET AND OUTLET PIPE(S). MATCH PIPE INVERTS WITH ELEVATIONS SHOWN. ALL PIPE CENTERLINES TO MATCH PIPE OPENING CENTERLINES.
E. CONTRACTOR TO TAKE APPROPRIATE MEASURES TO ASSURE UNIT IS WATER TIGHT, HOLDING WATER TO FLOWLINE INVERT MINIMUM. IT IS SUGGESTED THAT ALL JOINTS BELOW PIPE INVERTS ARE GROUTED.

CONTECH® ENGINEERED SOLUTIONS LLC
www.contechES.com
9025 Centre Pointe Dr., Suite 400, West Chester, OH 45069
800-338-1122 513-645-7000 513-645-7993 FAX

CS-4
CASCADE SEPARATOR
STANDARD DETAIL

I:\COMMON\CAD\TREATMENT\21 CASCADE\40 STANDARD DRAWINGS\DWG\CS-4-DTL.DWG 1/22/2019 9:34 AM

PZC PERMIT #_____ DATE OF APPROVAL_____ EXPIRATION DATE_____

PZC CHAIRMAN OR SECRETARY _____ DATE _____

REV.	DESCRIPTION OF REVISION	DATE	APPR.
4	RESPONSE TO REVIEW COMMENTS	07/13/2023	SRM
3	RESPONSE TO REVIEW COMMENTS	06/21/2023	SRM
2	REVISED PER UPDATED LAYOUT	05/01/2023	SRM
1	REVISED PER UPDATED LAYOUT	04/06/2023	SRM

STATE OF CONNECTICUT GEORGE F. ANDRESEN No. 19289 LICENSED PROFESSIONAL ENGINEER

Loureiro
Engineering Associates, LLC
Water • Facility Services • Laboratory
Loureiro Engineering Associates, Inc.
100 Pheasant Run, Newtown, PA 18940
Phone: 866-747-4151 • Fax: 866-747-8822
An Employee Owned Company • www.Loureiro.com
©Loureiro Engineering Associates, Inc.
All Rights Reserved 2022

SCALE: NOT TO SCALE
COMM. NO.: 0453C2.06
DRAWN BY: ESF — DATE: 04/06/2023
APPROVED BY: SRM — DATE: 04/06/2023

SITE DETAILS 3

GALES FERRY INTERMODAL
1761 ROUTE 12, GALES FERRY, CONNECTICUT 06335
PREPARED FOR:
GALES FERRY INTERMODAL LLC
549 SOUTH STREET, QUINCY, MA 02169

DRAWING
C-14

SHEET NO. 17 NO. OF SHEETS 19

V:\CT\GALES FERRY\ROUTE 12-1761\0453C2.06 LOCAL PERMIT FOR STERLING BUILDING\DWGS\CIVIL\DETAILS.DWG Tab: SITE DETAILS 3 Saved: 7/12/2023 11:43 AM by ESFARNER Plotted: 7/13/2023 2:13 PM

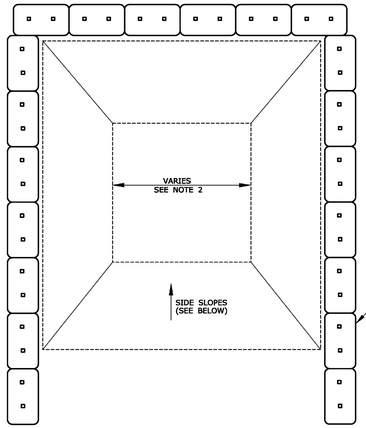

PLAN

GENERAL NOTES:

1. CONCRETE WASHOUT AREA(S) SHALL BE INSTALLED PRIOR TO CONCRETE PLACEMENT ON SITE. THE CONCRETE WASHOUT AREA SHALL BE ENTIRELY SELF-CONTAINED.
2. THE CONTRACTOR SHALL SUBMIT THE DESIGN, LOCATION AND SIZING OF THE CONCRETE WASHOUT AREA(S) WITH THE PROJECT'S EROSION AND SEDIMENTATION CONTROL PLAN AND SHALL BE APPROVED BY THE ENGINEER.

   LOCATION: WASHOUT AREA(S) ARE TO BE LOCATED AT LEAST 50 FEET FROM ANY STREAM, WETLAND, STORM DRAINS, OR OTHER SENSITIVE RESOURCE. THE FLOOD CONTINGENCY PLAN MUST ADDRESS THE CONCRETE WASHOUT IF THE WASHOUT IS TO BE LOCATED WITHIN THE FLOODPLAIN.

   SIZE: THE WASHOUT MUST HAVE SUFFICIENT VOLUME TO CONTAIN ALL LIQUID AND CONCRETE WASTE GENERATED BY WASHOUT OPERATIONS INCLUDING, BUT NOT LIMITED TO, OPERATIONS ASSOCIATED WITH GROUT AND MORTAR.
3. SURFACE DISCHARGE IS UNACCEPTABLE. THEREFORE, HAY BALES OR OTHER CONTROL MEASURES, AS APPROVED BY THE ENGINEER, SHOULD BE USED AROUND THE PERIMETER OF THE CONCRETE WASHOUT AREA FOR CONTAINMENT
4. SIGNS SHOULD BE PLACED AT THE CONSTRUCTION ENTRANCE, AT THE CONCRETE AREA(S) AND ELSEWHERE AS NECESSARY TO CLEARLY INDICATE THE LOCATION OF THE CONCRETE WASHOUT TO OPERATORS OF CONCRETE TRUCKS AND PUMP RIGS. WASHOUT AREA(S) SHOULD BE FLAGGED WITH SAFETY FENCING OR OTHER APPROVED METHOD.
5. WASHOUT AREA(S) ARE TO BE INSPECTED AT LEAST ONCE A WEEK FOR STRUCTURAL INTEGRITY, ADEQUATE HOLDING CAPACITY AND CHECKED FOR LEAKS, TEARS, OR OVERFLOWS. (AS REQUIRED BY THE CONSTRUCTION SITE ENVIRONMENTAL INSPECTION REPORT) WASHOUT AREA(S) SHOULD BE CHECKED AFTER HEAVY RAINS.
6. HARDENED CONCRETE WASTE SHOULD BE REMOVED AND DISPOSED OF WHEN THE WASTE HAS ACCUMULATED TO HALF OF THE CONCRETE WASHOUT'S DEPTH. THE WASTE CAN BE STORED AT AN UPLAND LOCATION, AS APPROVED BY THE ENGINEER. ALL CONCRETE WASTE SHALL BE DISPOSED OF IN A MANNER CONSISTENT WITH ALL APPLICABLE LAWS, REGULATIONS, AND GUIDELINES.
7. PAYMENT FOR THIS ITEM IS TO BE INCLUDED UNDER THE GENERAL COST OF THE WORK FOR THE PROJECT, INCLUDING SITE RESTORATION.

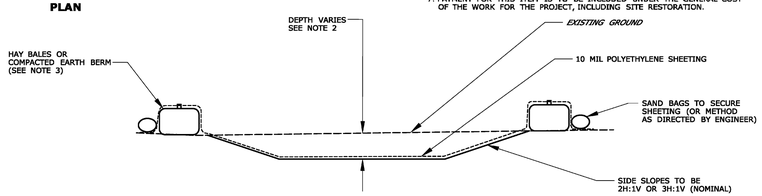

CONCRETE WASHOUT AREA

SCALE: NONE

NOTE:
1. CONTRACTOR TO LOCATE, ERECT, AND MAINTAIN.

RIPRAP APRON DIMENSIONS			
OUTLET	W1	La	W2
FES-1	3	9	10
FES-2	4	13	13
FES-3	3	7	8

NOTE:
IN ACCORDANCE WITH CT DOT DRAINAGE MANUAL SECTION 11.13 - OUTLET PROTECTION, ALL APRON STONE SHALL BE MODIFIED RIPRAP (DISCHARGE VELOCITY <8 FT/S)

RIPRAP APRON

SCALE: NONE

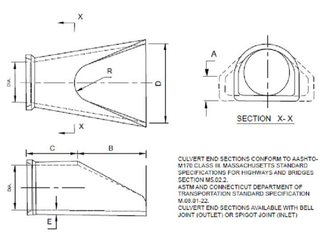

CULVERT END SECTIONS CONFORM TO AASHTO-M170 CLASS III MASSACHUSETTS STANDARD SPECIFICATIONS FOR HIGHWAYS AND BRIDGES SECTION M5.02.2.
ASTM AND CONNECTICUT DEPARTMENT OF TRANSPORTATION STANDARD SPECIFICATION M.09.01-22.
CULVERT END SECTIONS AVAILABLE WITH BELL JOINT (OUTLET) OR SPIGOT JOINT (INLET)

DIA	A	B	C	E	E	B
12"	4"	2'-9"	4'-9 7/8"	2'-9"	3"	9"
15"	6"	2'-3"	3'-10"	2'-9"	3"	11"
18"	9"	2'-3"	3'-10"	3'-0"	3"	13"
24"	9 1/2"	3'-1 1/2"	5'-6"	4'-0"	3"	14"
30"	12"	4'-6"	7'-7 3/4"	5'-0"	3 1/2"	16"
36"	15"	5'-3"	9'-10 3/4"	6'-0"	4"	20"
42"	21"	6'-3"	2'-11"	6'-0"	4 1/2"	22"
48"	24"	6'-9"	2'-2"	7'-0"	5"	22"
54"	27"	6'-9"	2'-11"	7'-6"	5 1/2"	24"
60"	30"	7'-0"	3'-3"	8'-0"	6"	24"

FLARED END SECTION

SCALE: NONE

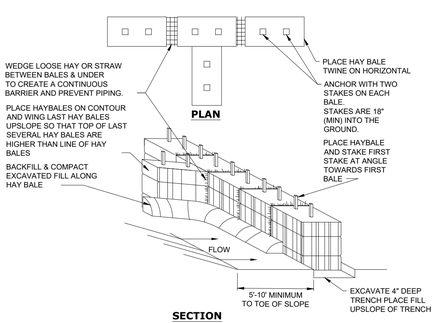

HAYBALE BARRIER

SCALE: NONE

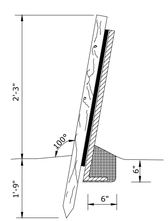

NOTE: PREMANUFACTURED FENCE MAY BE USED.

SILT FENCE

SCALE: NONE

EROSION AND SEDMIENTATION (E&S) CONTROL PLAN:

NARRATIVE

1. THIS EROSION AND SEDIMENTATION CONTROL (ESC) PLAN IS FOR THE CONSTRUCTION OF A NEW 6,000 SF INDUSTRIAL BUILDING AS WELL AS A 10,000 SF INDUSTRIAL BUILDING WITH A FUTURE 10,000 SF ADDITION, WITH ASSOCIATED LOADING DOCKS, ACCESS DRIVE, PARKING, UTILITY IMPROVEMENTS, LANDSCAPING IMPROVEMENTS, STORMWATER MANAGEMENT IMPROVEMENTS, A NEW SUBSURFACE SEWAGE DISPOSAL SYSTEM, AND OTHER ASSOCIATED SITE IMPROVEMENTS.
2. THE TOPOGRAPHY VARIES ACROSS THE SITE AND GENERALLY SLOPES FROM ROUTE 12 TO THE EXISTING ON-SITE INLAND WETLANDS. THE PORTION OF THE SITE WHERE THE PROPOSED WORK IS LOCATED SLOPES TO THE NORTH, SOUTH AND WEST. THE UNDERLYING SOIL ON THE SITE MOSTLY CONSISTS OF, FINE LOAMY SAND, HYDROLOGIC SOIL GROUP B.
3. A LARGE PORTION OF THE UPLAND SOILS WILL BE DISTURBED BY EARTHWORK ACTIVITIES AND THE INTENT OF THIS EROSION AND SEDIMENT CONTROL PLAN IS TO ESTABLISH STORMWATER CONTROLS DURING CONSTRUCTION TO PREVENT THE DISCHARGE OF SEDIMENT LADEN RUNOFF FROM ENTERING THE EXISTING INLAND WETLANDS.
4. EROSION CONTROL MEASURES INTENDED TO MINIMIZE SOIL EROSION AND TO CONTROL SEDIMENTATION DURING CONSTRUCTION INCLUDE:
   A. THE INSTALLATION OF SILT FENCE ALONG THE DOWN-GRADIENT LIMIT OF DISTURBANCE. INSTALL HAYBALES AS SHOWN ON PLANS.
   B. INSTALL SILTSACKS IN EXISTING CATCH BASINS IN THE PROJECT AREA. INSTALL SILT SACKS IN NEW CATCH BASINS DURING CONSTRUCTION.
   C. THE IMMEDIATE STABILIZATION OF FINAL GRADED AREAS THROUGH THE PLACEMENT OF RIPRAP, TOPSOIL, SEED, MULCH AND EROSION CONTROL NETTING.
   D. DEVELOPMENT OF A CONSTRUCTION OPERATIONS PLAN IN CONSIDERATION OF BASIC CONSTRUCTION SEQUENCING OUTLINED HEREIN.
5. IT IS ANTICIPATED THAT SITE WORK CONSTRUCTION WILL BEGIN IN THE SPRING OF 2023 AND WILL BE COMPLETED IN THE FALL OF 2023.

GENERAL E&S REQUIREMENTS

1. PRIOR TO THE START OF CONSTRUCTION, THE CONTRACTOR SHALL MEET WITH THE TOWN REPRESENTATIVE TO DISCUSS ESC REQUIREMENTS AND STORMWATER MANAGEMENT PROCEDURES.
2. CONSTRUCTION ENTRANCE SHALL BE INSTALLED BEFORE CONSTRUCTION TRAFFIC INTO AND OUT OF THE SITE BEGINS.
3. THE CONTRACTOR SHALL INSTALL HAYBALES AND SILT FENCING AS SHOWN ON THE EROSION & SEDIMENT CONTROL PLAN PRIOR TO INITIATING CONSTRUCTION ACTIVITIES AND SHALL BE MAINTAINED/REPAIRED UNTIL FINAL STABILIZATION OF ALL DISTURBED AREAS.
4. THE CONTRACTOR SHALL SEED AND MULCH DISTURBED AREAS EXPECTED TO REMAIN UNSTABILIZED FOR A PERIOD OF MORE THAN 30 DAYS.
5. THE CONTRACTOR SHALL COMPLETE PERMANENT SEEDING BETWEEN APRIL 15TH THROUGH JUNE 15TH AND AUGUST 15TH THROUGH SEPTEMBER 15TH. APPLY PERMANENT SOIL STABILIZATION MEASURES TO ALL GRADED AREAS WITHIN 7 DAYS OF ESTABLISHING FINAL GRADE AT A RATE OF 90 POUNDS PER 1,000 SQUARE FEET. RECOMMENDED SEED MIXTURE: FUTURA 2000 BY THE CHAS C. HART CO. CONTAINING THE FOLLOWING VARIETIES OF PERENNIAL RYEGRASSES: FIESTA II, BLAZER II, DASHER II AND EXPRESS.
6. UPON COMPLETION OF CONSTRUCTION, ALL DRAINAGE STRUCTURES SHALL BE CLEANED OF SEDIMENT AND DEBRIS. ALL REMOVED SEDIMENTS AND DEBRIS SHALL BE DISPOSED OF.
7. THE CONTRACTOR IS RESPONSIBLE FOR DUST CONTROL DURING THE CONSTRUCTION PROCESS. THE CONSTRUCTION MANAGER SHALL INSPECT THE SITE TO ASSURE DUST IS ADEQUATELY CONTROLLED. IF THE CONSTRUCTION MANAGER DETERMINES DUST CONTROL MEASURES ARE NOT ADEQUATE, THE CONTRACTOR SHALL BE REQUIRED TO INCREASE THESE MEASURES AS DIRECTED BY THE CONSTRUCTION MANAGER.
8. THE CONTRACTOR SHALL MAINTAIN EROSION CONTROLS.
9. EROSION AND SEDIMENT CONTROL MEASURES SHALL BE INSTALLED IN ACCORDANCE WITH THE LATEST EDITION OF THE STATE OF CONNECTICUT SOIL EROSION AND SEDIMENT CONTROL HANDBOOK. ALL MEASURES SHALL BE MAINTAINED AND UPGRADED TO ACHIEVE PROPER SEDIMENT CONTROL DURING CONSTRUCTION.
10. THE CONSTRUCTION MANAGER SHALL BE RESPONSIBLE FOR IMPLEMENTING AND INSPECTING EROSION AND SEDIMENT CONTROL MEASURES PER THIS PLAN AND SHALL INFORM ALL CONTRACTORS OF THE OBJECTIVES AND REQUIREMENTS OF THE PLAN. THE OWNER SHALL NOTIFY THE PROPER TOWN AGENCY OF ANY TRANSFER OF THIS RESPONSIBILITY AND SHALL ADVISE THE TOWN REGARDING THE NEED FOR IMPLEMENTING ADDITIONAL CONTROL MEASURES OR MAINTAINING EXISTING MEASURES AS DEEMED NECESSARY DURING CONSTRUCTION. WEEKLY INSPECTIONS SHALL BE CONDUCTED AND/OR WITHIN 24 HOURS OF THE END OF A STORM HAVING A RAINFALL AMOUNT OF ½ INCH OR GREATER. MONTHLY WRITTEN REPORTS SHALL BE PREPARED INFORMING THE TOWN OF LEDYARD OBSERVATIONS, MAINTENANCE, AND CORRECTIVE ACTIONS.
11. THE INDIVIDUAL RESPONSIBLE FOR MONITORING THE EROSION AND SEDIMENT CONTROL IMPLEMENTED PER THE PLAN AND WITH WHOM AN INSPECTOR FOR THE TOWN CAN CONTACT ROUTINELY IS CHASE DAVIS FROM GALES FERRY INTERMODAL LLC WITH PHONE NUMBER 781-789-9397.

CONSTRUCTION SEQUENCE

THE INTENT OF THE FOLLOWING CONSTRUCTION SEQUENCE IS TO ESTABLISH STORMWATER CONTROLS DURING EARTHWORK ACTIVITIES TO PREVENT THE DISCHARGE OF SEDIMENT LADEN RUNOFF FROM ENTERING STORM DRAIN SYSTEMS, WETLANDS AND WATERCOURSES.

THE ESC PLAN SHOWS THE PROPOSED GRADING WHICH DEPICTS THE APPROXIMATE EXCAVATION LIMITS AND RESULTING DRAINAGE PATTERNS UPON WHICH THE ESC MEASURES ARE PREDICATED. THE CONTRACTOR SHALL DEVELOP A CONSTRUCTION EXCAVATION PLAN BASED ON THEIR OPERATIONAL REQUIREMENTS.

1. CONTACT "CALL BEFORE YOU DIG" TO MARK OUT ALL UTILITY LOCATIONS PRIOR TO ANY CONSTRUCTION ACTIVITIES.
2. ENSURE ALL LAND USE PERMITS HAVE BEEN SECURED. OBTAIN ALL NECESSARY PERMITS.
3. THE PROJECT LAND SURVEYOR SHALL STAKE OUT PROPOSED CLEARING LIMITS PRIOR TO CONSTRUCTION.
4. INSTALL TEMPORARY CONSTRUCTION ENTRANCE, SEDIMENT FENCES AND/OR HAY BALE BARRIERS AS SHOWN ON THE EROSION & SEDIMENT CONTROL PLAN.
5. REMOVE ALL TREES, BRUSH AND STUMPS WITHIN CLEARING LIMITS AS NECESSARY. PROTECT WETLANDS AT ALL TIMES. THERE SHALL BE NO BURIAL OF CONSTRUCTION DEBRIS, STUMPS, BRUSH OR UNSUITABLE MATERIAL ON SITE.
6. EXCAVATE AND/OR FILL WORK SITE TO SUBGRADE LEVEL.
   A. NO ROCK CRUSHING AND/OR BLASTING IS PROPOSED. IF BLASTING IS REQUIRED FOR ROCK REMOVAL, A PRE-BLAST SURVEY SHALL BE PERFORMED. IF BLASTING AND ROCK CRUSHING ARE REQUIRED THEN APPROVAL OF THE PLANNING AND ZONING COMMISSION IS REQUIRED.
   B. FILL WILL BE PLACED AND COMPACTED IN 8 INCH LIFTS AND SHALL BE FREE OF BRUSH, RUBBISH, LOGS, BUILDING DEBRIS, OR ANY OTHER OBJECTIONABLE MATERIAL.
   C. MOISTEN SOIL SURFACE PERIODICALLY WITH WATER TO MINIMIZE DUST.
7. THE PROPOSED BUILDING AND SEPTIC SYSTEM SHALL BE STAKED OUT BY A LICENSED LAND SURVEYOR PRIOR TO CONSTRUCTION.
8. BEGIN CONSTRUCTION OF BUILDINGS, SEPTIC SYSTEM, AND INSTALL UTILITIES. ADD EROSION CONTROL DEVICES AS NEEDED.
9. THE CONTRACTOR SHALL BE RESPONSIBLE FOR CONSTRUCTING THE BUILDING AND SEPTIC SYSTEM IN THE EXACT LOCATION SHOWN AND SHALL BE CONSTRUCTED TO THE EXACT DIMENSIONS SHOWN ON THE LATEST SITE AND ARCHITECTURAL PLANS IN ACCORDANCE WITH THE APPROVED PLANS.
10. INSTALL STORMWATER MANAGEMENT IMPROVEMENTS AND DRAINAGE STRUCTURES STARTING FROM THE MOST DOWNGRADIENT IMPROVEMENTS.
11. ALL DISTURBED AREAS NOT COVERED BY BUILDINGS, PARKING, SIDEWALKS, GRAVEL SURFACES, ETC., SHALL BE GRADED AND STABILIZED AS FOLLOWS:
    A. PLACE MINIMUM 4 INCHES OF TOPSOIL IN ALL AREAS.
    B. APPLY RECOMMENDED SEED MIXTURE AT RECOMMENDED RATE.
    C. APPLY STRAW OR HAY MULCH ON ALL SEEDED AREAS. ALL GRADED AREAS WITH SLOPES GRADED AT 3H:1V OR STEEPER SHALL BE STABILIZED WITH EROSION CONTROL BLANKETS.
11. PLACE AND COMPACT BASE MATERIAL TO FINAL GRADE. INSTALL PAVEMENT, CURB, SIDEWALKS, GRAVEL, STEPS, ETC.
12. INSTALL FINAL PAVEMENT COURSE.
13. FINAL GRADE AND PLACE TOPSOIL SEED AND MULCH.
14. WHEN ALL GRADED AREAS ARE PERMANENTLY STABILIZED, REMOVE ALL EROSION AND SEDIMENT CONTROLS. REMOVE TRAPPED SEDIMENT.

MAINTENANCE OF EROSION CONTROL DEVICES:

1. HAYBALE BARRIERS/GEOTEXTILE SILT FENCES:
   A. INSPECT HAY BALE BARRIERS/GEOTEXTILE SILT FENCE AT LEAST ONCE A WEEK AND WITHIN 24 HOURS AFTER THE END OF A STORM WITH A RAINFALL AMOUNT OF 1/2" OR GREATER TO DETERMINE MAINTENANCE NEEDS.
   B. REMOVE SEDIMENT DEPOSITS OR INSTALL A SECONDARY BARRIER/FENCE WHEN SEDIMENT DEPOSITS REACH APPROXIMATELY ONE HALF HEIGHT OF THE BARRIER/FENCE.
   C. REPLACE OR REPAIR THE BARRIER/FENCE WITHIN 24 HOURS OF OBSERVED FAILURE. IF REPETITIVE FAILURE OCCURS, CONSULT 2002 GUIDELINES FOR TROUBLESHOOTING FAILURES.
   D. MAINTAIN THE HAY BALE BARRIER/SILT FENCE UNTIL THE CONTRIBUTING AREA IS STABILIZED.
   E. AFTER UPSLOPE AREAS HAVE BEEN PERMANENTLY STABILIZED, REMOVE STAKES FROM HAY BALES; PULL UP FENCE SUPPORT POSTS AND CUT OFF GEOTEXTILE AT GROUND. UNLESS OTHERWISE REQUIRED, HAY BALES MAY BE LEFT IN PLACE OR BROKEN UP FOR GROUND COVER. IF ACCUMULATED SEDIMENT EXCEEDS 6 INCHES, RE-GRADE OR REMOVE SEDIMENT. STABILIZE ANY DISTURBED SOILS.
2. CONSTRUCTION ENTRANCES AND ROADWAYS:
   A. MAINTAIN THE ENTRANCE IN A CONDITION WHICH WILL PREVENT TRACKING AND WASHING OF SEDIMENTS ONTO PAVED SURFACES.
   B. PROVIDE PERIODIC TOP DRESSING AND ADDITIONAL STONE OR LENGTH AS NECESSARY.
   C. IMMEDIATELY REMOVE ALL SEDIMENT SPILLED, DROPPED, WASHED OR TRACKED ONTO PAVED SURFACES. ROADS ADJACENT TO THE CONSTRUCTION SITE SHALL BE LEFT CLEAN EVERY DAY.

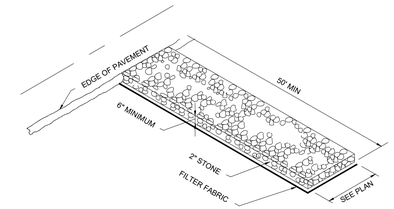

TEMPORARY CONSTRUCTION ENTRANCE

SCALE: NONE

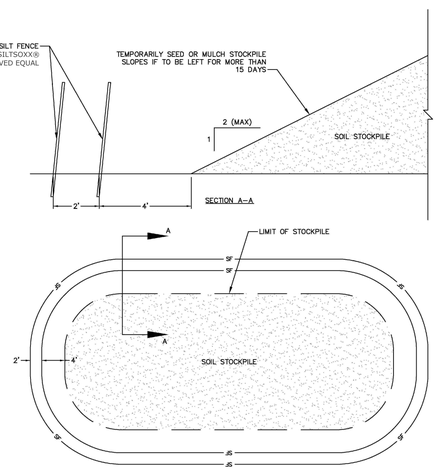

TEMPORARY SOIL STOCKPILE DETAIL

SCALE: NONE

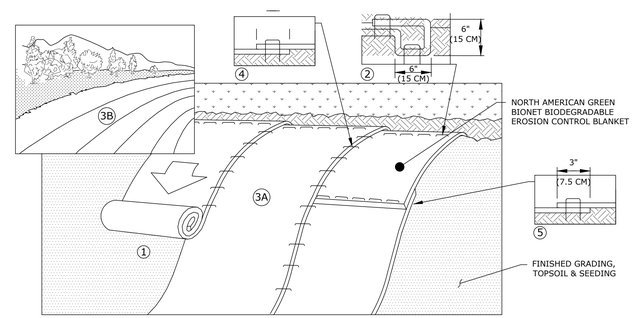

Notes:
1. PREPARE SOIL BEFORE INSTALLING BLANKETS, INCLUDING ANY NECESSARY APPLICATION OF LIME, FERTILIZER, AND SEED. WHEN USING CELL-O-SEED DO NOT SEED PREPARED AREA. CELL-O-SEED MUST BE INSTALLED WITH PAPER SIDE DOWN.
2. BEGIN AT THE TOP OF THE SLOPE BY ANCHORING THE BLANKET IN A 6",(15CM), DEEP X 6", (15CM), WIDE TRENCH WITH APPROXIMATELY 12", (30CM), OF BLANKET EXTENDED BEYOND THE UP-SLOPE PORTION OF THE TRENCH. ANCHOR THE BLANKET WITH A ROW OF STAPLES/STAKES APPROXIMATELY 12", (30CM), APART IN THE BOTTOM OF THE TRENCH. BACKFILL AND COMPACT THE TRENCH AFTER STAPLING. APPLY SEED TO COMPACTED SOIL AND FOLD REMAINING 12", (30CM), PORTION OF BLANKET BACK OVER SEED AND COMPACTED SOIL. SECURE BLANKET OVER COMPACTED SOIL WITH A ROW OF STAPLES/STAKES SPACED APPROXIMATELY 12", (30CM), APART ACROSS THE WIDTH OF THE BLANKET. IN LOOSE SOIL CONDITIONS, THE USE OF STAPLE OR STAKE LENGTHS GREATER THAN 6", (15 CM), MAY BE NECESSARY TO PROPERLY SECURE THE BLANKETS.
3. ROLL THE BLANKETS (A.) DOWN OR (B.) HORIZONTALLY ACROSS THE SLOPE. BLANKETS WILL UNROLL WITH APPROPRIATE SIDE AGAINST THE SOIL SURFACE. ALL BLANKETS MUST BE SECURELY FASTENED TO SOIL SURFACE BY PLACING STAPLES/STAKES IN APPROPRIATE LOCATIONS AS SHOWN IN THE STAPLE PATTERN GUIDE. WHEN USING OPTIONAL DOT SYSTEM ™, STAPLES/STAKES SHOULD BE PLACED THROUGH EACH OF THE COLORED DOTS CORRESPONDING TO THE APPROPRIATE STAPLE PATTERN.
4. THE EDGES OF PARALLEL BLANKETS MUST BE STAPLED WITH APPROXIMATELY 2"-5" ,(5CM-12.5CM), OVERLAP DEPENDING ON BLANKET TYPE. TO ENSURE PROPER SEAM ALIGNMENT, PLACE THE EDGE OF THE OVERLAPPING BLANKET (BLANKET BEING INSTALLED ON TOP) EVEN WITH THE COLORED SEAM STITCH ™ ON THE PREVIOUSLY INSTALLED BLANKET.
5. CONSECUTIVE BLANKETS SPLICED DOWN THE SLOPE MUST BE PLACED END OVER END (SHINGLE STYLE) WITH AN APPROXIMATE 3", (7.5CM), OVERLAP. STAPLE THROUGH OVERLAPPED AREA, APPROXIMATELY 12", (30CM), APART ACROSS ENTIRE BLANKET WIDTH.

EROSION CONTROL BLANKET DETAIL

SCALE: NONE

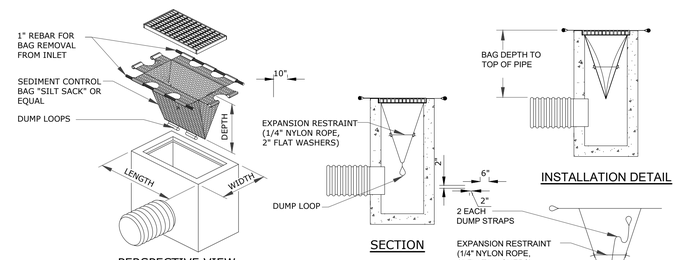

NOTES:

1. THE CONTRACTOR IS RESPONSIBLE FOR PROVIDING THE CORRECT SIZE DEVICE FOR EACH INLET. FOR NON-STANDARD CATCH BASINS AND INLETS, THE CONTRACTOR SHALL MEASURE DIMENSIONS IN THE FIELD AND ORDER THE APPROPRIATE SIZE(S).
2. THE INLET SEDIMENT CONTROL DEVICE SHALL BE OF HIGH FLOW DESIGN (200 GAL/MIN/FT), AS PER THE MANUFACTURER'S SPECS.
3. THE SEDIMENT CONTROL DEVICE SHALL BE INSPECTED DAILY BY THE CONTRACTOR AND CLEANED AND MAINTAINED A MINIMUM ONCE PER MONTH OR WITHIN THE 48 HOURS FOLLOWING A STORM EVENT. THE FILTER SHALL BE REPLACED OR CLEANED WHEN THE BAG BECOMES HALF FULL. THE FILTER SHALL BE CLEANED IN A MANNER WHICH ENSURES THAT ALL SEDIMENT REMAINS ON SITE.
4. SUBSTITUTION OF A SHEET OF FILTER FABRIC PLACED OVER THE OPENING OF THE INLET IS NOT APPROVED.
5. RECESSED CURB INLET CATCH BASINS MUST BE BLOCKED WHEN USING FILTER FABRIC INLET SACKS, SIZE OF FILTER INLET SACK TO BE DETERMINED BY MANUFACTURER.
6. THE FILTER DEVICE SHALL BE MANUFACTURED BY ACF ENVIRONMENTAL OR APPROVED EQUAL.

6"*
4.0'*
3.0'

CATCH BASIN FILTER (SILT SACK) DETAIL

SCALE: NONE

EROSION AND SEDIMENT CONTROL PLAN

CHAIRMAN/VICE CHAIRMAN OF THE ZONING COMMISSION OR ITS AGENT

DATE

PZC PERMIT #_____ DATE OF APPROVAL_____ EXPIRATION DATE_____

PZC CHAIRMAN OR SECRETARY

DATE

REV.	DESCRIPTION OF REVISION	DATE	
4	RESPONSE TO REVIEW COMMENTS	07/13/2023	SRM
3	RESPONSE TO REVIEW COMMENTS	06/21/2023	SRM
2	REVISED FOR UPDATED LAYOUT	05/01/2023	SRM
1	REVISED FOR UPDATED LAYOUT	04/06/2023	SRM

STATE OF CONNECTICUT
GEORGE F. ANDRUSKO
No. 19281
LICENSED
PROFESSIONAL ENGINEER

Loureiro
Engineering Associates, LLC
Loureiro Engineering Associates, Inc.
100 Venture Way • Hadley, MA 01035 • (413) 584-2850
Phone: 860-747-6181 • Fax: 860-747-8822
An Employee Owned Company • www.Loureiro.com
©Loureiro Engineering Associates, Inc.
All Rights Reserved 2022

SCALE: NOT TO SCALE
COMP. NO. 0453C2.06
DATE 04/06/2023
DRAWN BY ESF
DATE 04/06/2023
APPROVED BY SRM

SOIL EROSION AND SEDIMENT CONTROL DETAILS

GALES FERRY INTERMODAL
1761 ROUTE 12, GALES FERRY, CONNECTICUT 06335
PREPARED FOR:
GALES FERRY INTERMODAL LLC
549 SOUTH STREET, QUINCY, MA 02169

DRAWING
C-15

SHEET NO. 18 NO. OF SHEETS 19

V:\CT\GALES FERRY\ROUTE 12-1761\0453C2.06 LOCAL PERMIT FOR SITE\LIND BUILDING\DWGS\CIVIL\DETAILS.DWG Tab: SESC DETAILS Saved: 7/12/2023 11:43 AM by ESFARMER Plotted: 7/13/2023 2:13 PM

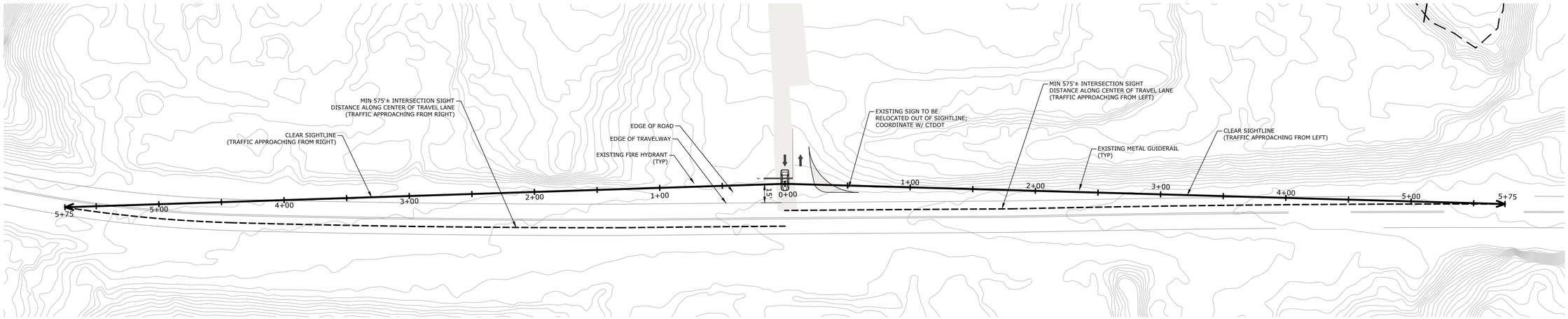

SIGHTLINE PLAN
1" = 40'

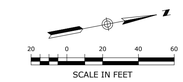

SCALE IN FEET

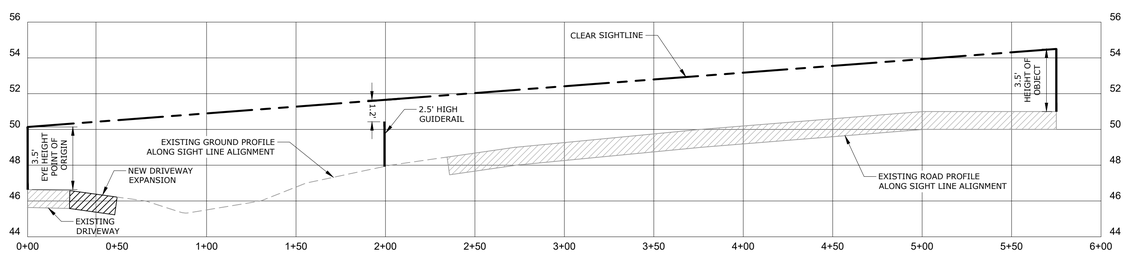

PROFILE - SIGHTLINE TO THE LEFT
HORIZONTAL SCALE: 1" = 40'
VERTICAL SCALE: 1" = 4'

NOTES:

1) EXISTING ROADSIDE VEGETATION WILL BE REMOVED / TRIMMED AS NEEDED TO PROVIDE THE CLEAR SIGHTLINES DEPICTED ON THIS PLAN. REFER TO SITE PREPARATION AND DEMOLITION PLAN.

2) TOPOGRAPHY AND ELEVATIONS DEPICTED ON THIS PLAN WERE OBTAINED FROM CTECO 2016 LIDAR.

3) INTERSECTION SIGHT DISTANCE (ISD) OF 575' IS BASED UPON RECORDED 85TH PERCENTILE SPEED OF 52 MPH, PROVIDED BY CTDOT.

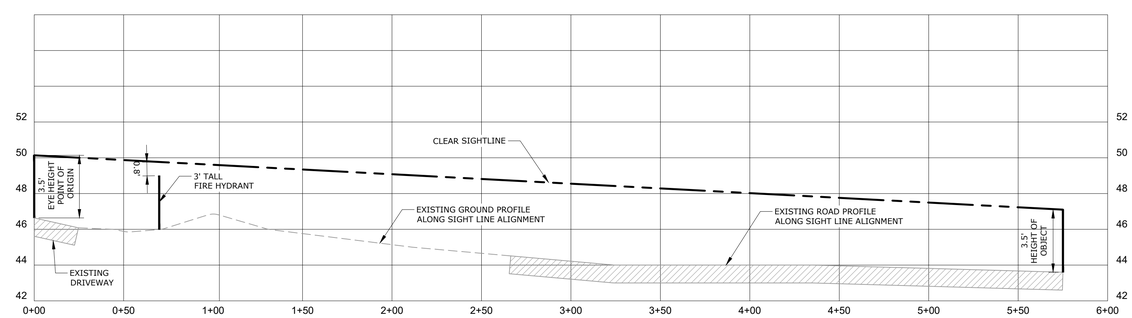

PROFILE - SIGHTLINE TO THE RIGHT
HORIZONTAL SCALE: 1" = 40'
VERTICAL SCALE: 1" = 4'

PZC PERMIT #_____ DATE OF APPROVAL_____ EXPIRATION DATE_____

PZC CHAIRMAN OR SECRETARY DATE

REV.	DESCRIPTION OF REVISION	DATE	APPR.
4	RESPONSE TO REVIEW COMMENTS	07/13/2023	SRM
3	RESPONSE TO REVIEW COMMENTS	06/21/2023	SRM
2	REVISED FIER UPDATED LAYOUT	05/01/2023	SRM
1	REVISED FIER UPDATED LAYOUT	04/06/2023	SRM

STATE OF CONNECTICUT GEORGE F. ANDRESKI No. 18281 LICENSED PROFESSIONAL ENGINEER

Loureiro Engineering Associates • Solutions • Results • Sign Up
Water • Facility Services • Laboratory

Loureiro Engineering Associates, Inc.
110 Mill Plain Road, Danbury, CT 06811-5092
Phone: 860-747-6181 • Fax: 860-747-8822
An Employee Owned Company • www.Loureiro.com

©Loureiro Engineering Associates, Inc.
All Rights Reserved 2022

SCALE 1"=40'
COMM. NO. 0493C2.06
DATE 04/06/2023
DRAWN BY TCG
DATE 04/06/2023
APPROVED BY SRM

SIGHTLINE DEMONSTRATION PLAN

PREPARED FOR:
GALES FERRY INTERMODAL
1761 ROUTE 12, GALES FERRY, CONNECTICUT 06335
GALES FERRY INTERMODAL LLC
549 SOUTH STREET, QUINCY, MA 02169

DRAWING
C-16

SHEET NO. 19 NO. OF SHEETS 19

V:\CT\GALES FERRY\ROUTE 12-1761\0493C2.06 LOCAL PERMIT FOR STERLING BUILDING\DWGS\CTV\LS\SIGHTLINE DEMONSTRATION PLAN.DWG Tab: SIGHTLINE DEMONSTRATION PLAN Saved: 6/21/2023 4:25 PM by ESFARMER Plotted: 7/13/2023 2:14 PM